RELIANCE Inset Lights
8-inch and 12-inch High-intensity Runway Guard Light, Runway Guard Light L-852G(L)

User Manual

UM-0197, Rev. 4.0, 2023/01/05

ADB SAFEGATE

A.0 Disclaimer / Standard Warranty

CE certification

The equipment listed as CE certified means that the product complies with the essential requirements concerning safety and hygiene. The European directives that have been taken into consideration in the design are available on written request to ADB SAFEGATE.

ETL certification

The equipment listed as ETL certified means that the product complies with the essential requirements concerning safety and FAA Airfield regulations. The FAA directives that have been taken into consideration in the design are available on written request to ADB SAFEGATE.

All Products Guarantee

ADB SAFEGATE will correct by repair or replacement per the applicable guarantee above, at its option, equipment or parts which fail because of mechanical, electrical or physical defects, provided that the goods have been properly handled and stored prior to installation, properly installed and properly operated after installation, and provided further that Buyer gives ADB SAFEGATE written notice of such defects after delivery of the goods to Buyer. Refer to the Safety section for more information on Material Handling Precautions and Storage precautions that must be followed.

ADB SAFEGATE reserves the right to examine goods upon which a claim is made. Said goods must be presented in the same condition as when the defect therein was discovered. ADB SAFEGATE furthers reserves the right to require the return of such goods to establish any claim.

ADB SAFEGATE's obligation under this guarantee is limited to making repair or replacement within a reasonable time after receipt of such written notice and does not include any other costs such as the cost of removal of defective part, installation of repaired product, labor or consequential damages of any kind, the exclusive remedy being to require such new parts to be furnished.

ADB SAFEGATE's liability under no circumstances will exceed the contract price of goods claimed to be defective. Any returns under this guarantee are to be on a transportation charges prepaid basis. For products not manufactured by, but sold by ADB SAFEGATE, warranty is limited to that extended by the original manufacturer. This is ADB SAFEGATE's sole guarantee and warranty with respect to the goods; there are no express warranties or warranties of fitness for any particular purpose or any implied warranties of fitness for any particular purpose or any implied warranties other than those made expressly herein. All such warranties being expressly disclaimed.

Standard Products Guarantee

Products manufactured by ADB SAFEGATE are guaranteed against mechanical, electrical, and physical defects (excluding lamps) which may occur during proper and normal use for a period of two years from the date of ex-works delivery, and are guaranteed to be merchantable and fit for the ordinary purposes for which such products are made.

Note

See your applicable sales agreement for a complete warranty description.

Replaced or repaired equipment under warranty falls into the warranty of the original delivery. No new warranty period is started for these replaced or repaired products.

FAA Certified products manufactured by ADB SAFEGATE

ADB SAFEGATE L858 Airfield Guidance Signs are warranted against mechanical and physical defects in design or manufacture for a period of 2 years from date of installation, per FAA AC 150/5345-44 (applicable edition).

ADB SAFEGATE LED products (with the exception of obstruction lighting) are warranted against electrical defects in design or manufacture of the LED or LED specific circuitry for a period of 4 years from date of installation, per FAA EB67 (applicable edition). These FAA certified constant current (series) powered LED products must be installed, interfaced and powered with and through products certified under the FAA Airfield Lighting Equipment Program (ALECP) to be included in this 4 (four) year warranty. This includes, but is not limited to, interface with products such as Base Cans, Isolation Transformers, Connectors, Wiring, and Constant Current Regulators.

Note

See your sales order contract for a complete warranty description.

Replaced or repaired equipment under warranty falls into the warranty of the original delivery. No new warranty period is started for these replaced or repaired products.

Liability

WARNING

Use of the equipment in ways other than described in the catalog leaflet and the manual may result in personal injury, death, or property and equipment damage. Use this equipment only as described in the manual.

ADB SAFEGATE cannot be held responsible for injuries or damages resulting from non-standard, unintended uses of its equipment. The equipment is designed and intended only for the purpose described in the manual. Uses not described in the manual are considered unintended uses and may result in serious personal injury, death or property damage.

Unintended uses, includes the following actions:

- Making changes to equipment that have not been recommended or described in this manual or using parts that are not genuine ADB SAFEGATE replacement parts or accessories.
- Failing to make sure that auxiliary equipment complies with approval agency requirements, local codes, and all applicable safety standards if not in contradiction with the general rules.
- Using materials or auxiliary equipment that are inappropriate or incompatible with your ADB SAFEGATE equipment.
- Allowing unskilled personnel to perform any task on or with the equipment.

TABLE OF CONTENTS

1.0 Safety

Introduction to Safety

This section contains general safety instructions for installing and using ADB SAFEGATE equipment. Some safety instructions may not apply to the equipment in this manual. Task- and equipment-specific warnings are included in other sections of this manual where appropriate.

1.1 Safety Messages

HAZARD Icons used in the manual

For all HAZARD symbols in use, see the Safety section. All symbols must comply with ISO and ANSI standards.

Carefully read and observe all safety instructions in this manual, which alert you to safety hazards and conditions that may result in personal injury, death or property and equipment damage and are accompanied by the symbol shown below.

	WARNING Failure to observe a warning may result in personal injury, death or equipment damage.
	DANGER - Risk of electrical shock or ARC FLASH Disconnect equipment from line voltage. Failure to observe this warning may result in personal injury, death, or equipment damage. ARC Flash may cause blindness, severe burns or death.
	WARNING - Wear personal protective equipment Failure to observe may result in serious injury.
	WARNING - Do not touch Failure to observe this warning may result in personal injury, death, or equipment damage.
	CAUTION Failure to observe a caution may result in equipment damage.
	ELECTROSTATIC SENSITIVE DEVICES This equipment may contain electrostatic devices.

Qualified Personnel

	Important Information The term **qualified personnel** is defined here as individuals who thoroughly understand the equipment and its safe operation, maintenance and repair. Qualified personnel are physically capable of performing the required tasks, familiar with all relevant safety rules and regulations and have been trained to safely install, operate, maintain and repair the equipment. It is the responsibility of the company operating this equipment to ensure that its personnel meet these requirements. Always use required personal protective equipment (PPE) and follow safe electrical work practice.

1.1.1 Introduction to Safety

CAUTION

Unsafe Equipment Use
This equipment may contain electrostatic devices, hazardous voltages and sharp edges on components

- Read installation instructions in their entirety before starting installation.
- Become familiar with the general safety instructions in this section of the manual before installing, operating, maintaining or repairing this equipment.
- Read and carefully follow the instructions throughout this manual for performing specific tasks and working with specific equipment.
- Make this manual available to personnel installing, operating, maintaining or repairing this equipment.
- Follow all applicable safety procedures required by your company, industry standards and government or other regulatory agencies.
- Install all electrical connections to local code.
- Use only electrical wire of sufficient gauge and insulation to handle the rated current demand. All wiring must meet local codes.
- Route electrical wiring along a protected path. Make sure they will not be damaged by moving equipment.
- Protect components from damage, wear, and harsh environment conditions.
- Allow ample room for maintenance, panel accessibility, and cover removal.
- Protect equipment with safety devices as specified by applicable safety regulations
- If safety devices must be removed for installation, install them immediately after the work is completed and check them for proper functioning prior to returning power to the circuit.

Failure to follow this instruction can result in serious injury or equipment damage

Additional Reference Materials

Important Information

- IEC - International Standards and Conformity Assessment for all electrical, electronic and related technologies.
- IEC 60364 - Electrical Installations in Buildings.
- FAA Advisory: AC 150/5340-26 (current edition), Maintenance of Airport Visual Aid Facilities.
- Maintenance personnel must refer to the maintenance procedure described in the ICAO Airport Services Manual, Part 9.
- ANSI/NFPA 79, Electrical Standards for Metalworking Machine Tools.
- National and local electrical codes and standards.

1.1.2 Intended Use

CAUTION

Use this equipment as intended by the manufacturer
This equipment is designed to perform a specific function, do not use this equipment for other purposes

- Using this equipment in ways other than described in this manual may result in personal injury, death or property and equipment damage. Use this equipment only as described in this manual.

Failure to follow this instruction can result in serious injury or equipment damage

1.1.3 Material Handling Precautions: Storage

CAUTION

Improper Storage
Store this equipment properly

- If equipment is to be stored prior to installation, it must be protected from the weather and kept free of condensation and dust.

Failure to follow this instruction can result in equipment damage

1.1.4 Material Handling Precautions: Fasteners

DANGER

Foreign Object Damage - FOD
This equipment may contain fasteners that may come loose - torque properly.

- Only use fasteners of the same type as the one originally supplied with the equipment.
- Use of incorrect combination of gaskets, bolts and nuts can create severe damages to the product installation and create safety risk .
- You need to know what base the light fixture will be installed in, in order to chose the correct gasket, bolts and nuts.
- Bolt type, length, and torque value are determined by type of base, height of spacers used, and clamp force required in FAA Engineering Brief No 83 (latest revision).
- Due to the risk of bolts vibrating loose, do not use any type of washer with the fixing bolts (such as split lock washers) other than an anti-vibration washer. Anti-vibration washers as defined in FAA EB 83 (latest edition) must be used. For installations other than FAA, use the base can manufacturer's recommendations.
- Always tighten the fasteners to the recommended torque. Use a calibrated torque wrench and apply the recommended adhesive type.
- Obey the instructions of the adhesives necessary for the fasteners.

Failure to follow these warnings may cause the fasteners to loosen, damage the equipment, potentially to loosen the equipment. This can lead to a highly dangerous situation of FOD, with potential lethal consequences.

Note

To minimize the risk of errors, the ADB SAFEGATE Sales Representative will have information on which gasket goes with which base. This information is also provided in the product Data sheets, the User Manuals and the Spare Part Lists.

CAUTION

Use of incorrect combination of gaskets, bolts and nuts can create severe damages to the product installation and create multiple safety risks.

To obtain a safe and watertight installation the O-ring and retaining bolt stated in the document must be used.

You need to know what base the light fixture will be installed in, in order to choose the correct gasket, bolts and nuts.

Failure to follow these cautions can result in equipment damage or aircraft FOD.

1.1.5 Operation Safety

CAUTION

Improper Operation
Do Not Operate this equipment other than as specified by the manufacturer

- Only qualified personnel, physically capable of operating the equipment and with no impairments in their judgment or reaction times, should operate this equipment.
- Read all system component manuals before operating this equipment. A thorough understanding of system components and their operation will help you operate the system safely and efficiently.
- Before starting this equipment, check all safety interlocks, fire-detection systems, and protective devices such as panels and covers. Make sure all devices are fully functional. Do not operate the system if these devices are not working properly. Do not deactivate or bypass automatic safety interlocks or locked-out electrical disconnects or pneumatic valves.
- Protect equipment with safety devices as specified by applicable safety regulations.
- If safety devices must be removed for installation, install them immediately after the work is completed and check them for proper functioning.
- Route electrical wiring along a protected path. Make sure they will not be damaged by moving equipment.
- Never operate equipment with a known malfunction.
- Do not attempt to operate or service electrical equipment if standing water is present.
- Use this equipment only in the environments for which it is rated. Do not operate this equipment in humid, flammable, or explosive environments unless it has been rated for safe operation in these environments.
- Never touch exposed electrical connections on equipment while the power is ON.

Failure to follow these instructions can result in equipment damage

1.1.6 Maintenance Safety

DANGER

Electric Shock Hazard
This equipment may contain electrostatic devices

- Do not operate a system that contains malfunctioning components. If a component malfunctions, turn the system OFF immediately.
- Disconnect and lock out electrical power.
- Allow only qualified personnel to make repairs. Repair or replace the malfunctioning component according to instructions provided in its manual.

Failure to follow these instructions can result in death or equipment damage

1.1.7 Material Handling Precautions, ESD

CAUTION

Electrostatic Sensitive Devices
This equipment may contain electrostatic devices

- Protect from electrostatic discharge.
- Electronic modules and components should be touched only when this is unavoidable e.g. soldering, replacement.
- Before touching any component of the cabinet you shall bring your body to the same potential as the cabinet by touching a conductive earthed part of the cabinet.
- Electronic modules or components must not be brought in contact with highly insulating materials such as plastic sheets, synthetic fiber clothing. They must be laid down on conductive surfaces.
- The tip of the soldering iron must be grounded.
- Electronic modules and components must be stored and transported in conductive packing.

Failure to follow this instruction can result in equipment damage

1.1.8 Arc Flash and Electric Shock Hazard

DANGER

Series Circuits have Hazardous Voltages
This equipment produces high voltages to maintain the specified current - Do NOT Disconnect while energized.

- Allow only qualified personnel to perform maintenance, troubleshooting, and repair tasks.
- Only persons who are properly trained and familiar with ADB SAFEGATE equipment are permitted to service this equipment.
- An open airfield current circuit is capable of generating >5000 Vac and may appear OFF to a meter.
- Never unplug a device from a constant current circuit while it is operating; Arc flash may result.
- Disconnect and lock out electrical power.
- Always use safety devices when working on this equipment.
- Follow the recommended maintenance procedures in the product manuals.
- Do not service or adjust any equipment unless another person trained in first aid and CPR is present.
- Connect all disconnected equipment ground cables and wires after servicing equipment. Ground all conductive equipment.
- Use only approved ADB SAFEGATE replacement parts. Using unapproved parts or making unapproved modifications to equipment may void agency approvals and create safety hazards.
- Check the interlock systems periodically to ensure their effectiveness.
- Do not attempt to service electrical equipment if standing water is present. Use caution when servicing electrical equipment in a high-humidity environment.
- Use tools with insulated handles when working with airfield electrical equipment.

Failure to follow these instructions can result in death or equipment damage

2.0 About this Manual

This document includes RELIANCE™ inset light fixture information with a focus on safety, installation and maintenance procedures.

For more information, see www.adbsafegate.com.

Note

It is very important to read this document before any work is started.

This manual covers the following 8-inch and 12-inch RELIANCE fixtures:

- High intensity Runway guard lights, Runway guard lights L-852G(L)

2.1 Abbreviations and Terms

This document may include the abbreviations and terms listed below.

Abbreviation and term	Description
A-SMGCS	Advanced Surface Movement Guidance and Control System
CAA	Civil Aviation Authority
CCR	Constant Current Regulator
FAA	Federal Aviation Administration
ICAO	International Civil Aviation Organization
IEC	International Electrotechnical Committee
ILCMS	Individual Light Control and Monitoring System
LED	Light Emitting Diode
NATO	North Atlantic Treaty Organization
SMGCS	Surface Movement Guidance and Control System
SSU	System Switch Unit
STAC	Service Technique de l'Aviation Civile (France)
STANAG	Standardization Agreement (NATO)

3.0 Introduction

RELIANCE - the all in one revolution

The RELIANCE inset light is a bi- or unidirectional low-protrusion light-emitting diode (LED) fixture and available in three versions:

- **RELIANCE** – A LED light fixture with integrated fail open technology with CCR monitoring compatibility.
- **RELIANCE IQ** – A RELIANCE with additional and integrated intelligence (IQ) in a built in converter for individual monitoring and control, based on RELIANCE Intelligent Lighting, ADB SAFEGATE's Individual Light Control and Monitor System (ILCMS).
- **RELIANCE IQ0** – RELIANCE IQ light fixture with disabled IQ (ILCMS) functionality. Non-MON light fixture with possibility to activate IQ at a later stage.

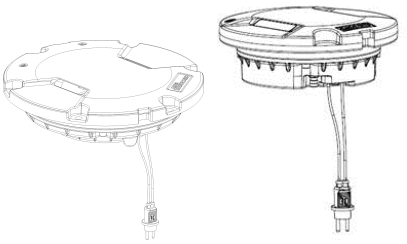

Note

RELIANCE IQ light fixtures are not fail-open light fixtures. When IQ is activated the monitoring as well as the control functionality is handled by the ILCMS system.

The inset light fixture is a 8-inch or 12-inch unidirectional low-protrusion LED light fixture.

The fixture can be installed in standard 8-inch or 12-inch bases, in existing or new airfield lighting systems. The light fixtures are ready for installation, each unit supplied completely assembled, tested and sealed. The electrical connection is with one or two secondary cable to a transformer(s), equipped with an FAA L-823 plug (style 6). Each unit is individually packed in a durable, cushioned and corrugated cardboard box, labeled with its reference name and code.

This document describes the installation, operation and maintenance of the inset light fixture.

3.1 Product Information

Compliance and Standards

Compliance	Description	Application:	RGL
		Reference DS-XXXX:	0198
FAA	AC 150/5345-46 and the FAA Engineering Brief No. 67		X
ICAO	Annex 14 Volume 1		X
EASA	CS-ADR-DSN		X
Australia	MOS 139		X
Canada	TP 312		X
IEC	61827		X
NATO	STANAG 3316		X
STAC	PRO/STAC/SE/VIS		X
UK	CAP 168		
CE			X

Uses

The runway guard light warns pilots and drivers of vehicles when operating on taxiways are they are about to enter an active runway. The inset runway guard lights are alternatively yellow flashing lights and installed across the taxiway.

ICAO	Runway guard lights (ICAO, section 5.3.23)
FAA	Runway guard lights L-852G(L)

Common Features and Benefits

Efficiency

- RELIANCE IQ fixture with built-in controlled flashing to be directly connected to the series transformer
- Available standalone system version including a remote control device keeping the light output synchronized
- Together with RELIANCE Intelligent Lighting, every light fixture is synchronized, controlled and monitored
- Compliance with Advanced Surface Movement Guidance and Control System (A-SMGCS)
- Light Emitting Diode (LED) technology that offers a long-lasting light source with low power consumption
- Compatibility with existing electrical infrastructure and the RELIANCE Intelligent Lighting 2A system for further power savings

Sustainability

- Fully encapsulated all-in-one electronics
- IP68 protected, anodized aluminum housing designed for harsh weather environments, all fastenings in stainless steel
- Reinforced prism available as an option
- Operates on 3- or 5-step ferroresonant or thyristor CCRs designed in compliance with IEC or FAA requirements
- Easy handling and maintenance by modular design with few mechanical parts
- Compatible with existing infrastructure

Safety

- Built-in voltage surge and lightning protection
- Fully dimmable lights, respecting the response curve of traditional halogen lights
- Low protrusion, high-intensity, Style 3 inset light fixtures
- No negative slope in front of the prisms

Power Supply

An integrated, encapsulated 6.6A electronic converter. Two-pole L-823 plug for connection to the transformer. Power factor typically >0.9 @ 6.6A.

Refer to the POWER TABLE in Appendix B and CABLE LOSS in appendix C.

Maintenance and Installation

The light fixture can be installed in an 8-inch or 12-inch base. Gaskets are sold separately. Check what gasket and bolts to order depending on base and installation.

Refer to INTEROPERABILITY page in Appendix A, within interoperability information for installation in a specific base.

Operating Conditions

Operating temperature	-60 °C to +55 °C / -76 °F to +131 °F
Storage temperature	-60 °C to +80 °C / -76 °F to +176 °F
Humidity	Up to 100%

3.2 Dimensions and Weight

8-inch light fixture

Weight	5.3 kg / 11.8 lb

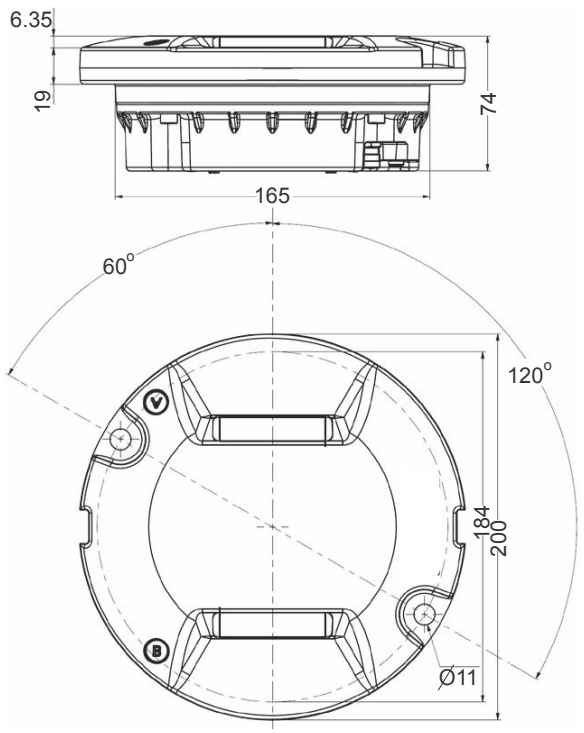

8-inch

12-inch light fixture

Weight	6.3 kg / 13.9 lb
Dimension A	85 mm

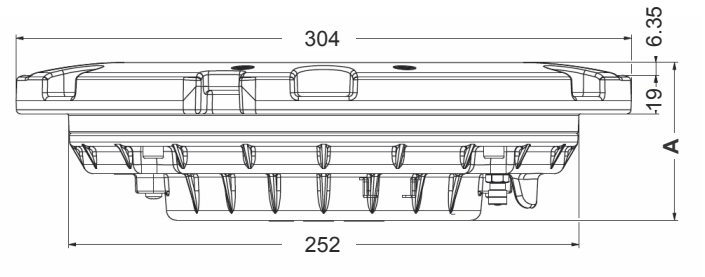

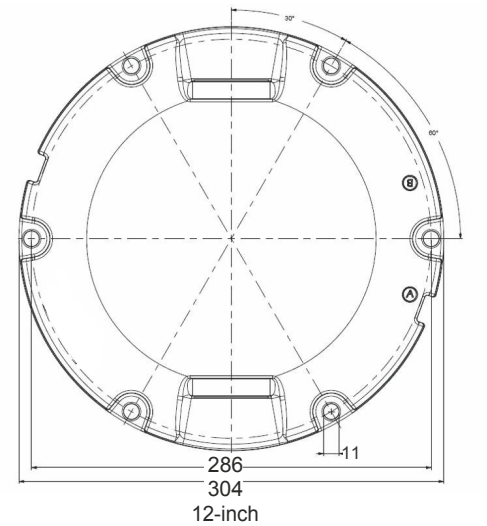

3.3 Description of the Runway Guard light fixture

The runway guard lights warns the pilots, and drivers of vehicles when they are operating on taxiways, that they are about to enter a runway. The inset runway guard lights are alternately yellow flashing lights that are installed across the taxiway.

3.3.1 Runway Guard Light system description

The runway guard lights have built-in IQ functionality, RELIANCE IQ, and the lights shall be directly connected to the serial transformers. The flashing is generated in the fixture and is synchronized via the SCM module that is located in the substation. This system will work as a standalone autonomous system.

If the individual lights in the runway guard lights needs to be monitored or more than one runway guard light circuits are in use, then a NCU is added in the substation. The NCU will serve for example the tower with status and failure alarms.

Elevated runway guard lights could be installed in the same circuits as the inset runway guard lights.

Figure 1 shows the components in a runway guard light system. The NCU is optional.

Figure 1: System overview

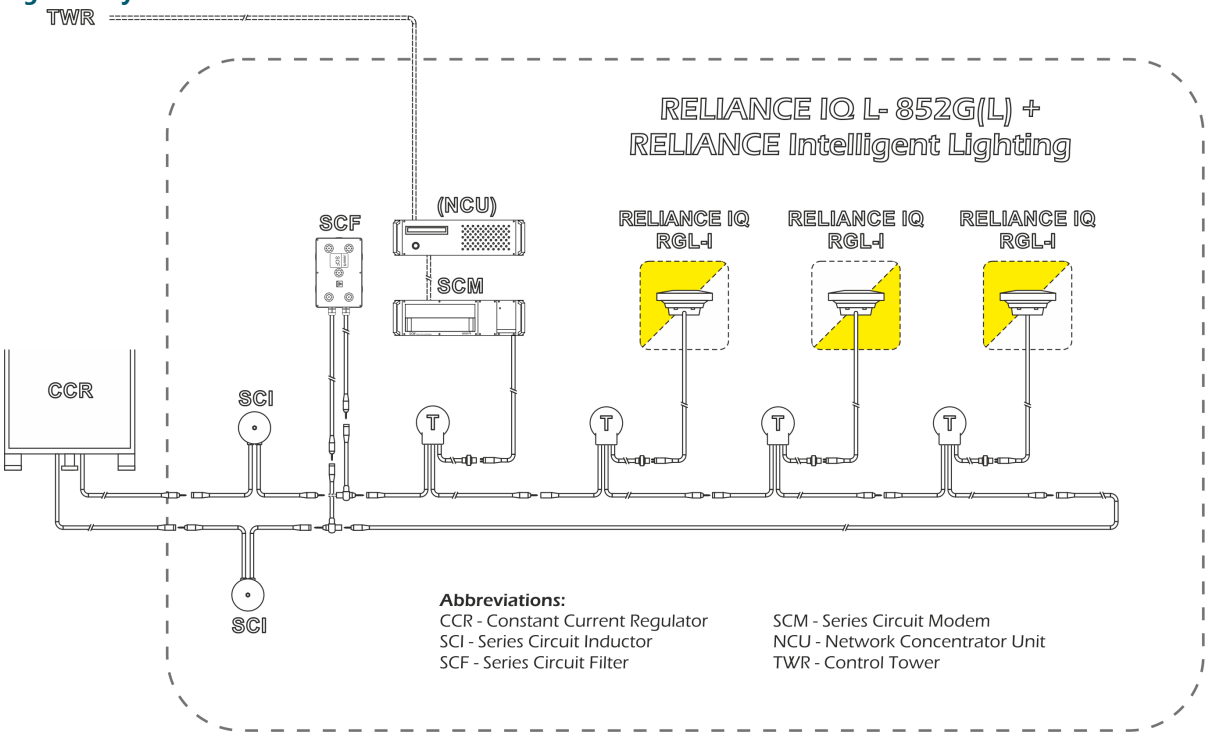

4.0 Installation

4.1 Unpacking the Unit

To reduce the possibility of damaging the light assembly, unpack the light fixtures at the installation site. If damage to any equipment is noted, file a claim form with the carrier immediately.

When receiving the light fixture, open the box and verify that the characteristics of the light fixture correspond to the design requirements, such as type, color etc. When installing a light fixture where the control and monitoring function is to be activated at a later stage, make sure to register product information, such as PID/SN and position of the light fixture in, for example, a site documentation table. The information is required for remote activation and administration of control and monitoring functionality from a substation.

4.2 Tools required

The following tools are recommended for installation.

- One Box spanner 16/17 mm
- One torque wrench with a 16/17 mm socket
- Two large flat headed screwdrivers for lifting the light fixture
- One T20 Torx key
- One brush or cloth

Note

Provided that the base intended to receive the light fixture has been properly installed, no other specific tool is required.

4.3 Installation and removal of the 8-inch light fixture

Install the light fixture in a base

Installation instructions for the inset light fixtures as follows:

- Light bases shall be installed with care to assure vertical and azimuth alignment of fixture.
- Provide 60–90 cm / 2–3-feet cable slack within light base to allow transformer servicing.
- The minimum thread engagement into top flange of base is 0.5-inch.
- As required to maintain +0/ through -1/16-inch below grade FAA installation tolerance, a maximum of three spacer rings may be stacked together.

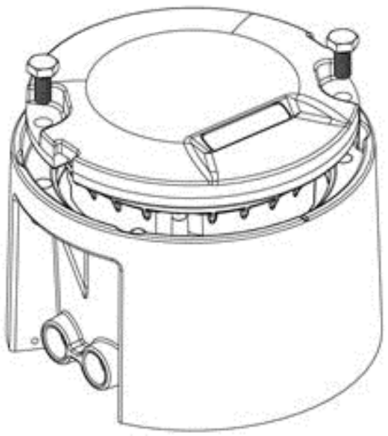

1. Carefully clean all contact surfaces of the light fixture and the base.
2. Put the O-ring gasket in the gasket track on the base.
3. Connect the connector(s) of the light fixture to the base supply cable(s). Check that the A- and B-side are connected to corresponding circuit if two connectors are used.
4. Place the connector under the light fixture and install on the base.
5. For an installation on bases, use a torque limiting box spanner of 16/17 mm, install and tighten the two fixing bolts or nuts to a torque value according to specification, see INTEROPERABILITY. For other base manufacturers, refer to their specifications.

Note

Do not use high speed for tightening, the recommended speed is 10 - 40 rpm. Do not used an impact driver/ wrench.

6. After installation, check that each light fixture functions properly.
7. In order to bond the light fixture to ground, use the a screw (Torx M4×6 mm, Torque 2.5 Nm) to attach the braided ground strap to the grounding point on the light fixture. The grounding point is indicated by a grounding symbol and located on the bottom side.

Remove the fitting from the base

CAUTION

Fall- and trip hazard! When a light fixture has been removed, the base must be fitted with a cover designed for this purpose or with a spare light fixture.

1. Remove the light fixture from the base using two large flat blade screwdrivers.
2. Disconnect the secondary supply connector.
3. Remove and check the gasket (O-ring or labyrinth).

Note

It is recommended to change the gasket, lock nuts or bolts each time the light fixture is removed or dismounted from the base. For more information, see INTEROPERABILITY.

CAUTION

Use of incorrect combination of gaskets, bolts and nuts can create severe damages to the product installation and create multiple safety risks.

Make sure to know what base the light fixture will be installed in, in order to chose the correct gasket, bolts and nuts.

Failure to follow these cautions can result in equipment damage or aircraft FOD. For more information, see INTEROPERABILITY.

4.4 Installation and Removal of the 12-inch Light Fixture

WARNING

Read the instructions in their entirety before starting installation.

This section provides instructions for installing the in-pavement lights. Refer to airport project plans and specifications for specific installation instructions. The installation must conform to the applicable sections of the National Electric Code and local codes.

Install the light fixture in a base, class 1, direct-mounted fixtures

Figure 2: 12-in shallow base, class 1, direct-mounted fixtures

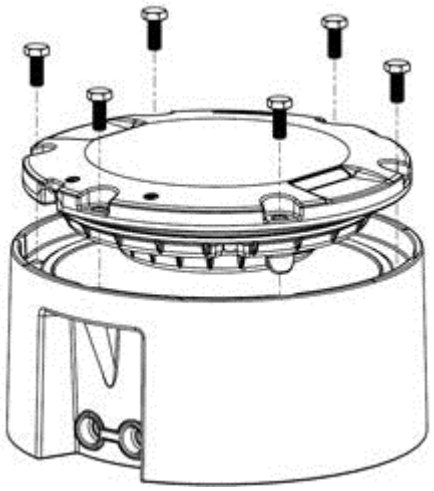

1. Carefully clean all contact surfaces of the light fixture and the base.
2. Put the O-ring gasket in the gasket track on the base.

Note
Not for class 2.

3. Connect the connector(s) of the light fixture to the base supply cable(s). Check that the sides 1 and 2 are connected to corresponding circuit if two connectors are used.
4. Align the position of the light fixture in one line with the holes.
5. Mount light fixture to the base.

Note
Make sure the secondary cables are below the light and not quenched between the light and base.

6. For an installation on bases, use a torque limiting box spanner of 16/17 mm, install and tighten the two, four or six fixing bolts (version-dependent) or nuts to a torque value according to specification, see INTEROPERABILITY. For other base manufacturers, refer to their specifications.

Note
Do not use high speed for tightening, the recommended speed is 10 - 40 rpm. Do not used an impact driver/ wrench.

7. After installation, make sure that each light fixture functions properly.
8. In order to bond the light fixture to ground, use a ground lug or grounding screw (torque 2.5 Nm) to attach the braided ground strap or ground wire to the grounding point on the light fixture. The grounding point is indicated by a grounding symbol and located on the bottom side.

Remove the fitting from the base

CAUTION
Fall- and trip hazard! When a light fixture has been removed, the base must be fitted with a cover designed for this purpose or with a spare light fixture.

1. Remove the light fixture from the base using two large flat blade screwdrivers.
2. Disconnect the secondary supply connector.
3. Remove and check the gasket (O-ring or labyrinth).

Note
It is recommended to change the gasket, lock nuts or bolts each time the light fixture is removed or dismounted from the base. For more information, see INTEROPERABILITY.

CAUTION
Use of incorrect combination of gaskets, bolts and nuts can create severe damages to the product installation and create multiple safety risks.

Make sure to know what base the light fixture will be installed in, in order to chose the correct gasket, bolts and nuts.

Failure to follow these cautions can result in equipment damage or aircraft FOD. For more information, see INTEROPERABILITY.

5.0 Operation

Note

Refer to the UM-0600 and other documentation related to RELIANCE IL I and listed with ordering numbers in Data sheet DS-0600 for further info.

6.0 Maintenance

This section describes different steps for maintenance of the light fixture.

Before you start, make sure you have read and understand Safety instructions.

Find out the location of the light unit that needs maintenance. If the purpose is to replace an existing light unit with new one, make sure that corresponding unit is available. Find the type information on the identification tag with details of name.

Spare parts are available, if required. For more information, see www.adbsafegate.com and the Spare Parts List document, or contact ADB SAFEGATE for assistance.

CAUTION

Use of incorrect combination of gaskets, bolts and nuts can create severe damages to the product installation and create multiple safety risks.

You need to know what base the light fixture will be installed in, in order to chose the correct gasket, bolts and nuts.

Failure to follow these cautions can result in equipment damage or aircraft FOD. For more information, see INTEROPERABILITY.

CAUTION

When a light fixture has been removed from its base, the base must be either fitted with a cover or a spare light fixture put in its place. It is recommended that only authorized personnel disassemble fittings with prior agreement from ADB SAFEGATE.

6.1 Workshop Maintenance

CAUTION

Before you start, make sure you have read and understand Safety instructions.

The following standard tools and accessories are required for maintenance of the unit:

- One angled socket spanner of 16 or 17 mm [1]
- One Torque limiting spanner with 16 or 17 mm socket [1]
- One hexagonal key (Allen key) of 3, 4, and 5 mm
- Torx 10, 20, 25, and 30
- Two large flat blade screwdrivers
- Silicone grease
- CC-Patron grease
- One brush or cloth
- Non-alcohol based cleaner

Note

A compressor, or a manual car tire pump, equipped with a manometer is required to check the light fixture for water-tightness.

Design may differ from picture depending on application. Please follow described work flow and torque level specified as they are generic.

[1] Depending on type and size of nuts and bolts

The workshop maintenance refers to following:

1. Replace a light fixture
2. Check the light fixture for water-tightness
3. Replace a light engine
4. Replace a prism and its gasket
5. Replace the bottom cover and converter
6. Reset the fail-open converter

6.2 Basic Maintenance Program

There are recommended maintenance tasks to ensure that the equipment is in correct operating condition.

Table 1: Maintenance tasks

Weekly	• Visual inspection of the light fixture. • Removal of dust from external surfaces of the light fixture.
Monthly	• Check of the optical window, check for mechanical damage. • Check for proper fixing of the light fixture in its base.
Yearly	• Detailed inspection of the light fixture. • Check of the body resistance, check for mechanical damage (for example cracks around prism windows). • Clean of the optical windows.

A daily function check is referred to in the document:

ICAO, Airport Services Manual Part 9, Airport Maintenance Practice and FAA AC 150/5340-26A, Maintenance of airport visual aids facilities.

The light fixture is designed for outdoor operation, however storing the light fixture outside without using it is a risk for damage to light fixture components. For a longer storage time (more than a week), it is recommended to store the light fixture indoors in a dry and dust free environment and at room temperature. Proper storage ensures trouble free replacement procedures. It is strongly recommended not to store any electrical equipment outside.

6.2.1 Workshop Maintenance 8-inch fixture

6.2.1.1 Open and close an 8-inch Fixture

Remove

1. Place the light fixture upside down and remove the four screws for the bottom cover using an Allen key 4 mm, see Figure 3.
2. Lift up the housing and disconnect the LED board cable connector from the LED boards in the top cover, see Figure 4.

Note
Open the light fixture cautiously, be careful not to damage the LED-board cables.

3. Remove the bottom cover from the top cover.
4. Remove the O-ring gasket from the bottom cover, see Figure 5.

Figure 3: Fixture upside down

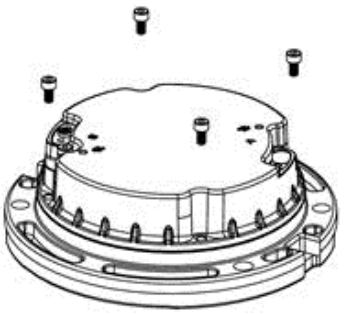

Figure 4: Lift up housing

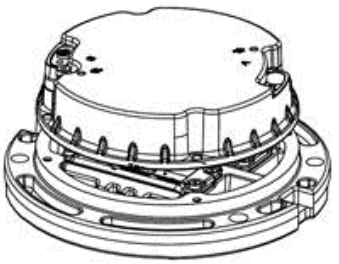

Figure 5: Remove gasket

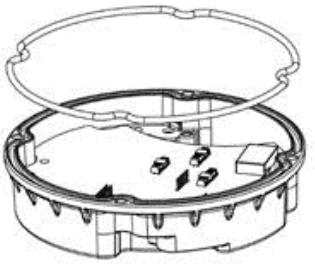

Replace

1. Carefully clean all contact surfaces of the light fixture and of the housing.
2. Install a new O-ring gasket on the bottom cover.

Note

The O-ring gasket must be changed each time the light fixture is disassembled.

3. Connect the LED board cable connector(s) to the Supply Terminal(s) of the converter in the housing. Note the orientation and alignment of the LED board cables, which are different between 1 connector and 2 connector versions.

   Converters with 1 connector: The cables should have colored wires towards each other and crossed.

   Converters with 2 connectors: The cables should have colored wires away from each other and crossed. Light fixtures with only one LED-board need to have its LED-board connected to the LED B channel, see Figure 6. Place the top cover over the bottom cover, align A and B sides on the top cover with the corresponding sides on the bottom cover.

Figure 6: Converter with 1 connector

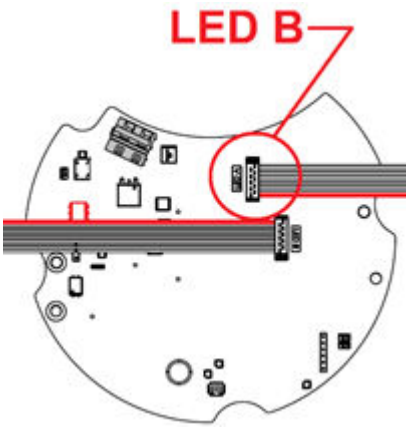

Figure 7: Converter with 2 connectors

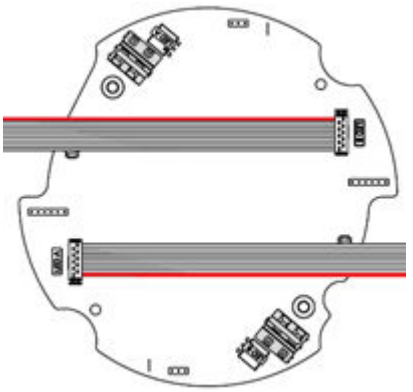

Note

Before closing the light fixture, it is important to make sure the O-ring gasket is placed correctly in the groove of the bottom cover to prepare the light fixture for water tightness checks and use in the airfield.

4. Put the light fixture on a surface with the top cover facing down, see Figure 8.

5. Tighten the four screws using a torque limiting spanner 4 mm Allen key to a torque of 8 Nm (equivalent to 0.8 kg m or 8 g.cm), see Figure 9.

Figure 8: Fixture facing down

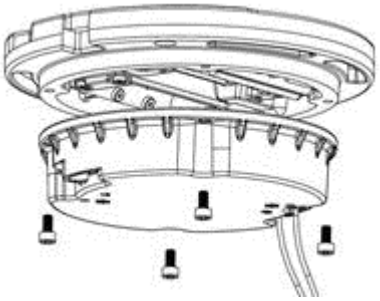

Figure 9: Tighten screws

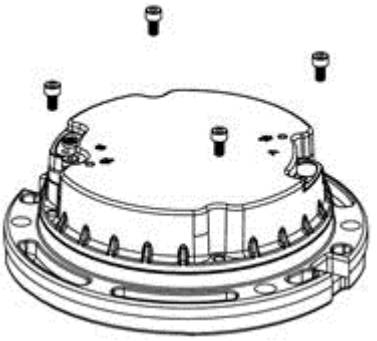

6. Check the light fixture for water-tightness. For more information, see Check the Light Fixture for Water-tightness.

6.2.1.2 Replace a Light Engine in an 8-inch Fixture

Remove

1. Disassemble the light fixture.
2. Detach and remove the LED board holder, including 4 screws from the body, using a 3 mm Allen key, see Figure 10.

   Figure 10: Remove the LED board holder

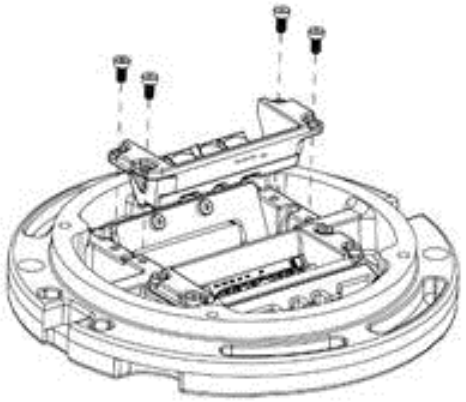

Replace

1. Attach the new LED board holder, including screws. The screws on the LED holder shall be tightened gently in sequence, following number 1-4, see Figure 11.
2. Tighten the same screws to a torque of 4.5 Nm, following number 5-8, see Figure 11.

   Figure 11: Tighten screws

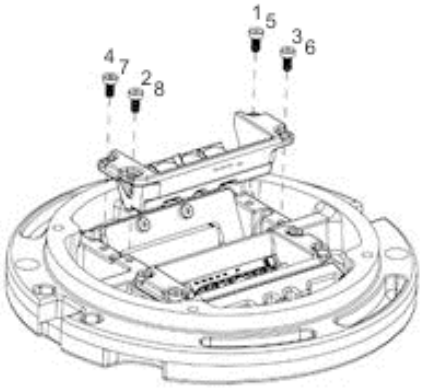

3. Connect the LED-cable(s) to the LED-board(s), note the cable orientation in the picture, see Figure 12.

   Figure 12: LED board

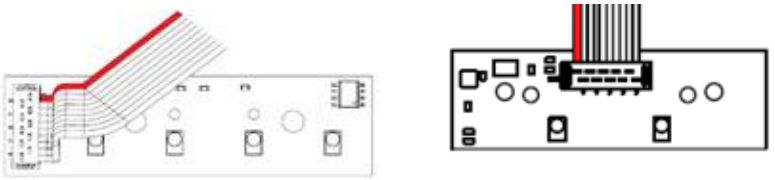

4. Assemble the light fixture.

6.2.1.3 Replace the Bottom Cover and Converter

Remove

1. Disassemble the light fixture.
2. From inside the housing, disconnect all cables from the LED board.

Replace

1. Place the new gasket on the new bottom cover with converter, see Figure 13.

   Figure 13: Gasket

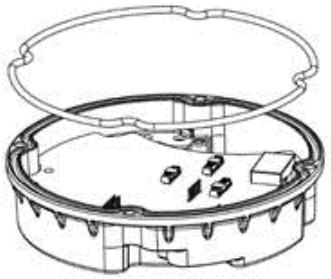

2. Connect the LED board cable(s). Note the orientation and alignment of the cables in Figure 14 and Figure 15.

> **Note**
> Make sure that light fixtures with only one LED board cable is connected to the LED B-channel.

Figure 14: Converter with 1 connector

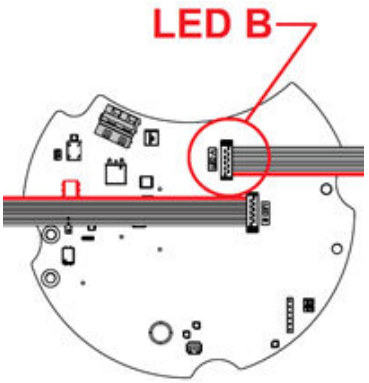

Figure 15: Converter with 2 connectors

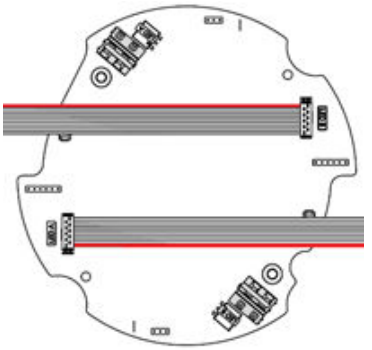

3. Assemble the light fixture.

6.2.2 Workshop Maintenance 12-inch fixture

6.2.2.1 Open and close a 12-inch Fixture

Remove

1. Place the light fixture upside down and remove the four screws for the bottom cover using an Allen key 5 mm, see Figure 16.
2. Lift up the housing and disconnect the LED board cable connector from the LED boards in the top cover, see Figure 17.

> **Note**
> Open the light fixture cautiously, be careful not to damage the LED-board cables.

3. Remove the top cover from the bottom cover.
4. Remove the O-ring gasket from the bottom cover, see Figure 18.

Figure 16: Fixture upside down

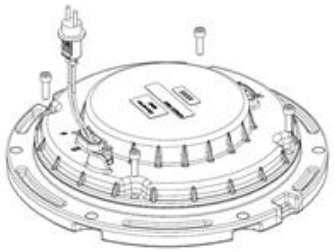

Figure 17: Lift up housing

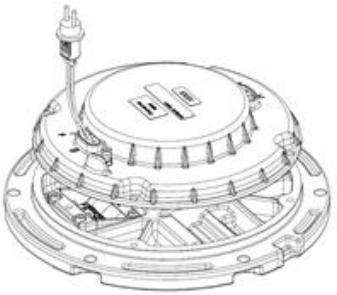

Figure 18: Remove gasket

Replace

1. Carefully clean all contact surfaces of the light fixture and of the housing.
2. Install a new O-ring gasket on the bottom cover.

> **Note**
> The O-ring gasket must be changed each time the light fixture is disassembled.

3. Connect the LED board cable connector(s) to the Supply Terminal(s) of the converter in the housing. Note the orientation and alignment of the LED board cables, which are different between 1 connector and 2 connector versions.

   Converters with 1 connector: the cables should have colored wires towards each other and crossed.

   Converters with 2 connectors: the cables should have colored wires away from each other and crossed. Light fixtures with only one LED-board need to have its LED-board connected to the LED B channel, see Figure 19. Place the top cover over the bottom cover, align A and B sides on the top cover with the corresponding sides on the bottom cover.

> **Note**
> Before closing the light fixture, it is important to make sure the O-ring is placed correctly in the groove of the bottom cover to prepare the light fixture for water tightness checks and use in the airfield. For more information, see INTEROPERABILITY.

Figure 19: Converter with 1 connector

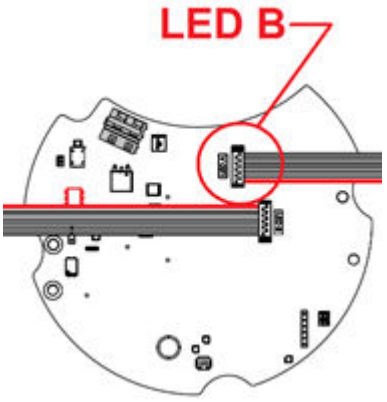

Figure 20: Converter with 2 connectors

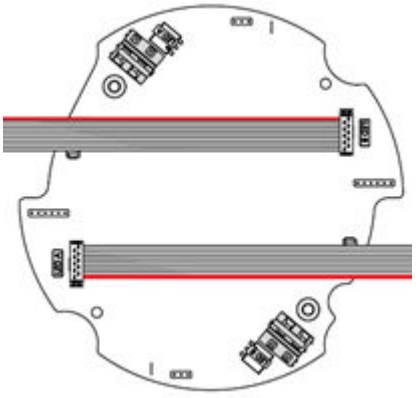

4. Put the light fixture on a surface with the top cover facing down, see Figure 21.

5. Tighten the four screws using a torque limiting spanner, 5 mm Allen key or Torx key size 30 to a torque of 10 Nm (equivalent to 1.0 kg m or 10 g cm), see Figure 22.

Figure 21: Fixture facing down

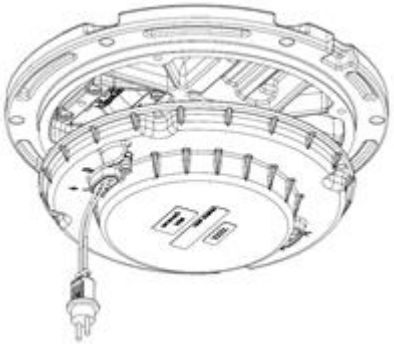

Figure 22: Tighten screws

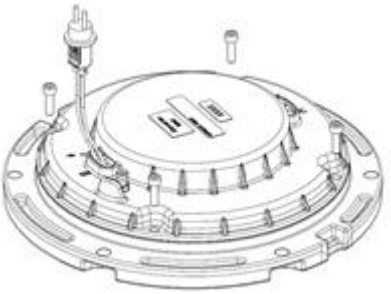

6. Check the light fixture for water-tightness. For more information, see Check the Light Fixture for Water-tightness.

6.2.2.2 Replace a Light Engine in a 12-inch Fixture

Remove

1. Disassemble the light fixture.
2. Detach and remove the LED board holder, including 4 screws from the body, using a 4 mm Allen key.

Figure 23: Replacing a light engine

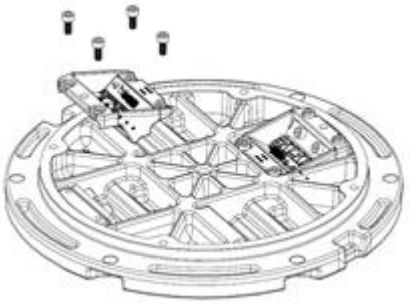

Replace

1. Attach the new LED board holder, including screws. The screws on the LED holder shall be tightened gently in sequence, following number 1-4, see Figure 24.
2. Tighten the same screws to a torque of 4.5 Nm, following number 5-8, see Figure 24.

Figure 24: Tighten screws

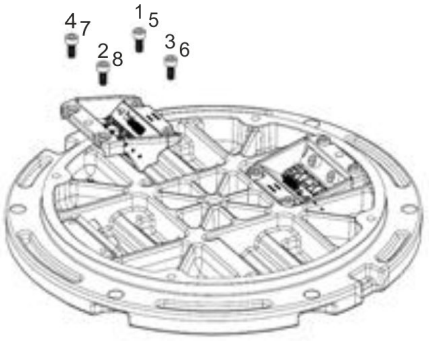

3. Connect the LED-cable(s) to the LED-board(s), note the cable orientation, see Figure 25.

Figure 25: LED board

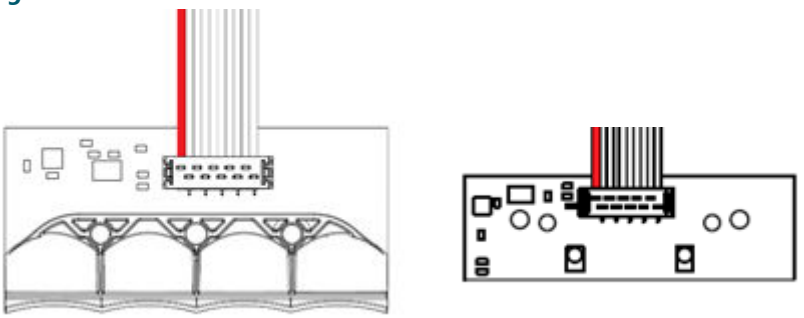

4. Assemble the light fixture.

6.2.2.3 Replace the Bottom Cover and Converter

Remove

1. Disassemble the light fixture.
2. From inside the housing, disconnect all cables from the LED board.

Replace

1. Place the new gasket on the new bottom cover with converter.
2. Connect the LED board cable(s). Note the orientation and alignment of the cables in Figure 26 and Figure 27.

> **Note**
> Make sure that light fixtures with only one LED-cable is connected to the LED B-channel.

Figure 26: Converter with 1 connector

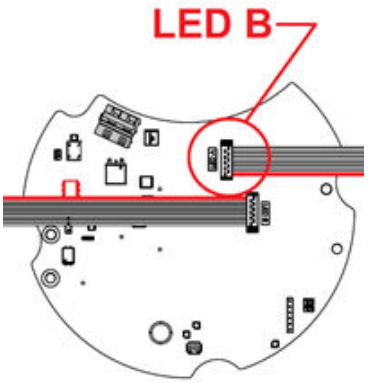

Figure 27: Converter with 2 connectors

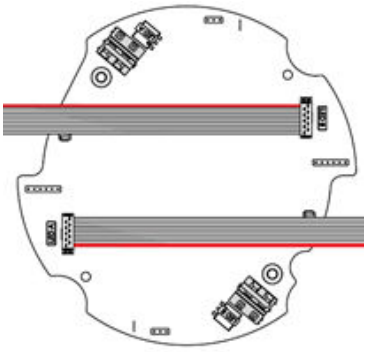

3. Assemble the light fixture.

6.2.3 Check the Light Fixture for Water-tightness

If maintenance is carried out in a workshop, check the water-tightness of the light.

Prepare

1. Remove the water-tightness test valve cap.
2. Fill up the light fixture with compressed air (test pressure = 130 kPa).

Test

1. Put the light fixture in water, wait 3 minutes and check if air leaks out of the light.
   a. If air leaks out of the light fixture (between bottom cover and top plate or between prism and top plate or water-tightness valve and top plate), the light fixture is not watertight and must be repaired. Release the air from the light. Disassemble the light fixture and re-check the mating surfaces and gaskets. Assemble the light fixture and perform the water-tightness test again.
   b. If the light fixture is water tight, release the compressed air from the light fixture and assemble the cap on the test valve.
2. The light fixture is ready to be reinstalled in the field.

DANGER
Never exceed pressure of 150 kPa inside the light fixture as this may lead to personal injuries and damage the light.

6.2.4 Reset the Fail-Open Converter 2.3

Open

1. Disconnect and disassemble the light fixture.
2. Make sure you have a 2-way electrical shunt/jumper (2.54 mm/0.100-inch spacing), see Figure 28.

Figure 28: 2-way electrical shunt/jumper

Reset

1. Locate the 3-pin reset connector(s) on the converter. For the two-connector converter, there is one reset connector for each side.
2. Place the 2-way electrical shunt (2.54 mm spacing) over the **two pins** marked red, see Figure 29 and Figure 30.

Figure 29: Converter with 1 connector

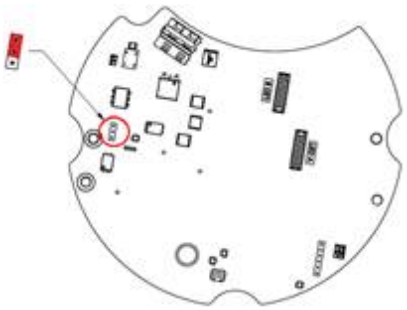

Figure 30: Converter with 2 connectors

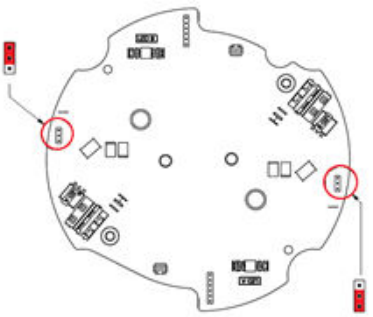

3. Close the light fixture and connect it to a CCR.
4. Energize the light fixture until there is a steady light, then turn the CCR off and unplug the light fixture.

5. Disassemble the light fixture, then remove the two-way electrical shunt (2.54 mm spacing) from the pins.
6. Assemble the light fixture and perform a functional test.

6.2.5 Reset the Fail-Open Converter 48010921 and 48011111

Parts

- Fuse resistor spare part kit: 20210209 (20pcs)

Info

- Converter with 1 connector have 2 fuse resistors
- Converter with 2 connectors have 4 fuse resistors

Reset / replace the fuse resistors

1. Disconnect and disassemble the light fixture.
2. Locate the fuse resistors, see Figure 31 and Figure 32.

Figure 31: Converter with 1 connector

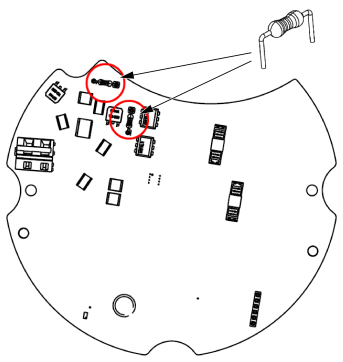

Figure 32: Converter with 2 connectors

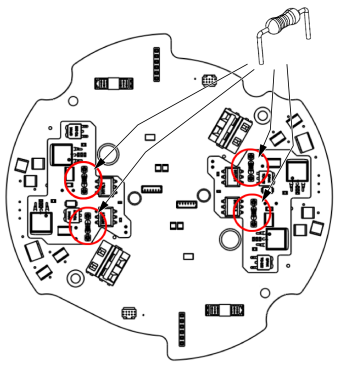

3. Remove the fuse resistors by pulling away from the converter.
   a. For converters with 1 connector, always replace both fuse resistors at the same time.
   b. For converters with 2 connectors, always replace both fuse resistors related to the A/B channel that needs to be reset. If both A and B channel needs a reset, replace all 4 fuse resistors.
4. Dispose the old fuse resistor.
5. Place the legs of the new fuse resistors in the sockets.
6. Assemble the light fixture and perform a functional test.

7.0 Ordering Codes and Spare Parts

Spare parts are available for RELIANCE and RELIANCE IQ inset light fixtures. For more information, see www.adbsafegate.com and the spare part lists, or contact ADB SAFEGATE for assistance.

7.1 Ordering code

Ordering Code S I RG□□□□□□□□□□□□□

Prism
S = Standard prism
R = Reinforced prism

Diameter
1 = 8 in
2 = 12 in

Type
U = Unidirectional

Light Distribution
S = Straight

Options
0 = No options

Color – B Side
Y = Yellow

Color – A side
N = Blank

Power and Monitoring
P = 2.8 - 6.6 A/2 A, IQ0 (IQ disabled)
Q= 2.8 - 6.6 A/2 A, IQ1 (IQ enabled)

Standards
I = ICAO
G = Global

Cord set type
A = FAA Style 6 (2-pin) plug
F = Flat 3-pin plug (French, for ICAO only)

Cable and connector
2 = 1x 2-pin plug
4 = 1x 3-pin plug

Version
3 = RELIANCE

Note

The IQ - functionality allows control and monitoring of the RELIANCE IQ. IQ1 fittings are pre - configured for the specific position at delivery. IQ 0 fixtures needs to be configured before use.

7.2 RELIANCE 8” Inset Light (RGL)

Note

Contact ADB SAFEGATE for assistance with ordering spare parts, www.adbsafegate.com.

Description		Quantity per		Order code SGE.SPXXXXX
		fitting	order	
1	Top plate Unidirectional	1	1	17108
2a	Prism incl. gasket, protection plate and prism holder	1	2	17114
2b	Reinforced prism incl. gasket, protection plate and prism holder	1	2	17115
3a	Yellow LED assembly incl. reflector (Runway guard light)	1	1	18599
4	LED cable for 8" fixture	1	10	18650
5	Bottom cover gasket	1	10	17116
6b	Bottom cover assembly incl. RELIANCE IQ0 converter and secondary cable	1	1	17117

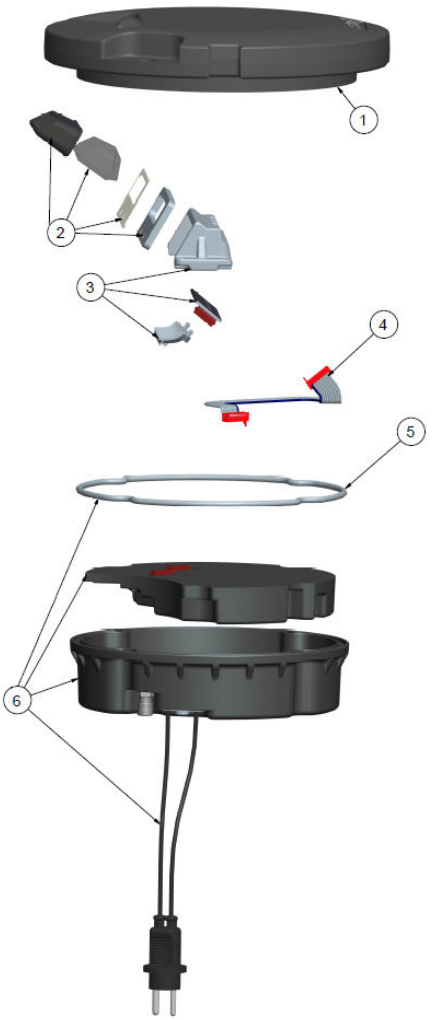

Note

All screws for fastening are included.

Component availability or design may be subject to change due to unforeseen circumstances. This document is subject to change or new information from ADB SAFEGATE, as and when available or if required, with reservation for error or price changes.

For more information or assistance with ordering spare parts, contact ADB SAFEGATE, see www.adbsafegate.com.

7.3 RELIANCE 12" Inset Light (RGL)

Note

Contact ADB SAFEGATE for assistance with ordering spare parts, www.adbsafegate.com.

Description		Quantity per		Order code
		fitting	order	
1	Top plate, unidirectional straight	1	1	SP.012974
2a	Prism incl. prism gasket, protection plate and prism holder	1	2	SGE.SP18497
2b	Reinforced prism incl. prism gasket, protection plate and prism holder	1	2	SGE.SP18498
3a	Yellow LED assembly incl. reflector and LED holder (runway guard light)	1	1	SGE.SP18601
4	LED cable 270 mm	1	10	SGE.SP18502
5	O-ring gasket for bottom cover	1	10	SGE.SP18503
6b	Bottom cover assembly incl. RELIANCE IQ0 converter and secondary cable	1	1	SGE.SP18504
	Bottom cover replacement mounting screws M6×25 mm	4	200	SP.012977

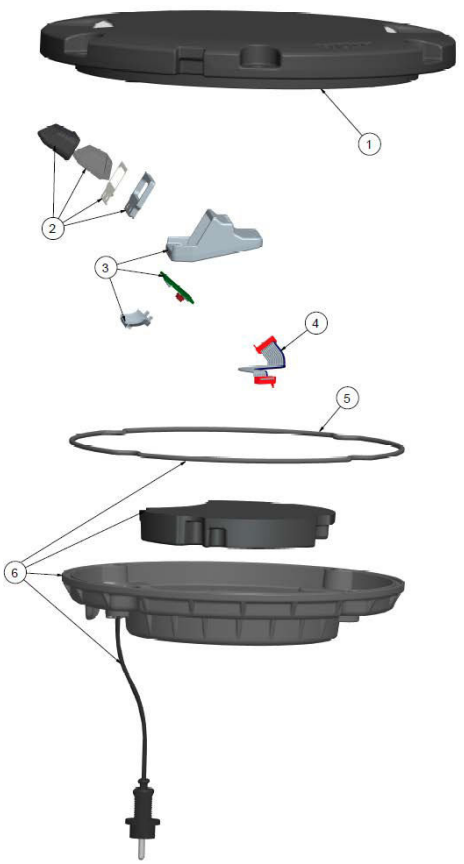

Note

All screws for fastening are included.

Component availability or design may be subject to change due to unforeseen circumstances. This document is subject to change or new information from ADB SAFEGATE, as and when available or if required, with reservation for error or price changes.

For more information or assistance with ordering spare parts, contact ADB SAFEGATE, see www.adbsafegate.com.

Appendix A: INTEROPERABILITY

Base installation – O-ring selection and retaining bolts for 12-inch

CAUTION

Use of incorrect combination of gaskets, bolts and nuts can create severe damages to the product installation and create multiple safety risks.

To obtain a safe and watertight installation the O-ring and retaining bolt stated in the document must be used.

You need to know what base the light fixture will be installed in, in order to choose the correct gasket, bolts and nuts.

Failure to follow these cautions can result in equipment damage or aircraft FOD.

Table 2: Interoperability matrix

Base type	Required O-ring	Bolt installation		Stud installation	
		Required dimension	Recommended torque	Required nut	Recommended torque
RELIANCE 12-in (150 mm)	O-ring D259, 3×5,7 SP.013114/10pc SP.013115/100pc	1411.20.482 metric screw kit 12-in M10×25 mm	40 Nm + locking washer, max. height 2 mm	1411.20.500 self-locking nut kit 12-in M10 H=100	35 Nm
ERNI 12-in ED12-190					
Thorn 12-in (150 mm)	O-ring D259, 3×5,7 SP.013114/10pc SP.013115/100pc	1411.20.482 metric screw kit 12-in M10×25 mm	40 Nm + locking washer, max. height 2 mm [1]	1411.20.500 self-locking nut kit 12-in M10 H=100	35 Nm [1]
Thorn 12-in (100 mm)					
ADB 12-in Eurobase	O-ring D259, 3×5,7 SP.013114/10pc SP.013115/100pc	1411.20.482 metric screw kit 12-in M10×25 mm	21 Nm + Loctite 2701 or 638	1411.20.500 self-locking nut kit 12-in M10 H=100	21 Nm [2]
L-868 deep can with Flange	O-ring D259, 3×5,7 SP.013114/10pc SP.013115/100pc	1411.20.452 UNC screw kit	Reference EB83	N/A	N/A

Notes

[1] Only with non-roll over lights

[2] Do not use Loctite or washer with self-locking nut

Base installation – O-ring selection and retaining bolts for 8-inch

Figure 33: Top cover versions

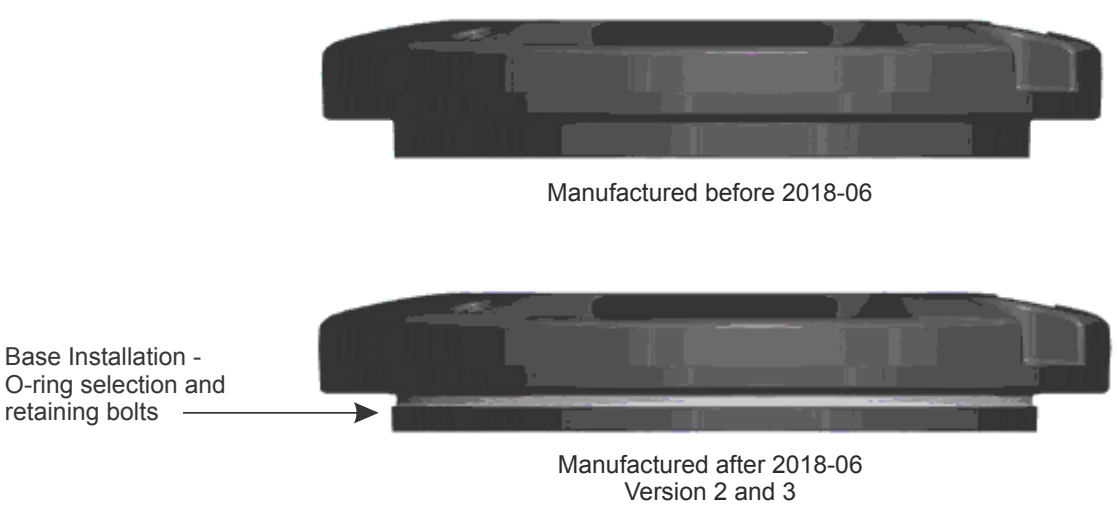

Base installation – O-ring selection and retaining bolts

Note

If the use of Loctite is not necessary or obligatory, then it is recommended to use a suitable lubricant when fastening the bolts. Use nickel or graphite grease, but do NOT use copper-based grease as it stimulates corrosion.

CAUTION

Use of incorrect combination of gaskets, bolts and nuts can create severe damages to the product installation and create multiple safety risks.

To obtain a safe and watertight installation the O-ring and retaining bolt stated in the document must be used.

You need to know what base the light fixture will be installed in, in order to choose the correct gasket, bolts and nuts.

Failure to follow these cautions can result in equipment damage or aircraft FOD.

Table 3: Manufactured before 2018-06 version 1

Base type	Required O-ring	Bolt installation		Stud installation	
		Required dimension	Recommended torque	Required nut	Recommended torque
Base 8-in-13X-..	Black O-ring SGE.SP13092/10 pc SGE.SPFR500355/25 pc SGE.SP11566/50 pc	1411.20.522, metric screw kit 8-in M10×25 mm	40 Nm + locking washer, max height 2 mm	1411.20.430, self-locking nut kit 8-in M10 H100	35 Nm
Thorn 8-in (100 mm)					
Thorn 8-in (133 mm)					

Table 4: Manufactured after 2018-06 version 2 and 3

Base type	Required O-ring	Bolt installation		Stud installation	
		Required dimension	Recommended torque	Required nut	Recommended torque
RELIANCE Base 8-in (135 mm)	Red O-ring SGE.SP24523/10 pc SGE.SP24526/100 pc	1411.20.522, metric screw kit 8-in M10×25 mm	40 Nm + locking washer, max height 2 mm	1411.20.430, self-locking nut kit 8-in M10 H100	35 Nm
ERNI 8-in EE08					
ERNI 8-in ED08 (133 mm)					
Thorn 8-in (100 mm)					
Thorn 8-in (133 mm)					
Thorn 8-in MK2 (133 mm)					
IDM 6494 (120 mm)	Red O-ring SGE.SP24523/10 pc SGE.SP24526/100 pc	1411.20.522, metric screw kit 8-in M10x25 mm	40 Nm + locking washer, max height 2 mm	1411.20.430, self-locking nut kit 8-in M10 H100	35 Nm
Adapter ring SG/Thorn/ID 8-in–12-in					
ADB 8-in Eurobase	Blue O-ring SGE.SP242521/10 pc SGE.SP24524/100 pc	1411.20.522, metric screw kit 8-in M10x25 mm	21 Nm + Loctite 2701 or 638	1411.20.430, self-locking nut kit 8-in M10 H100	21 Nm [1]
Adapter ring ADB 8-in–12-in					
ADB 8-in HPI	Grey O-ring SGE.SP24522/10 pc SGE.SP24525/100 pc	1411.20.522, metric screw kit 8-in M10x25 mm	21 Nm + Loctite 2701 or 638	1411.20.430, self-locking nut kit 8-in M10 H100	21 Nm [1]

Notes

[1] Do not use Loctite or washer with self-locking nut

The pictures below show photos of the bases mentioned above and the frame shows the color of the intended gasket.

Figure 34: Shallow bases

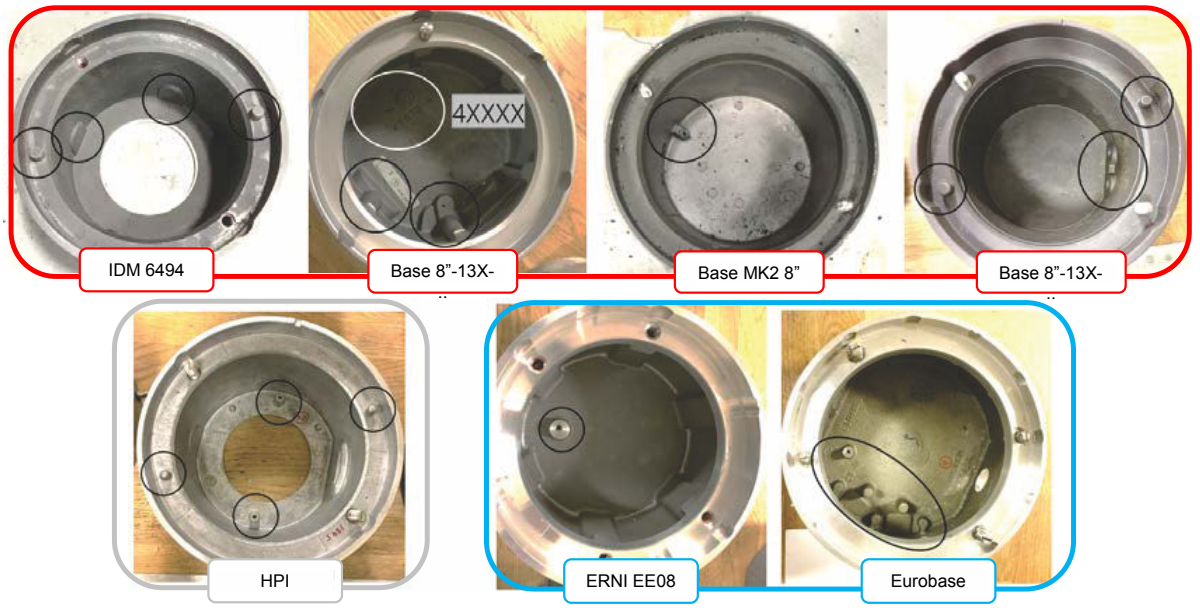

Appendix B: POWER TABLE

The load presented in the table below must be considered when calculating the total CCR load. This is valid for 12- and 8-inch light fixtures.

Unidirectional Fixtures – 1 cord set	Fixture load	Isolation transformer			CCR load
		Rating	Loss	Efficiency	
Runway guard light, L-852G(L)	21 VA	25 W	9 VA	0.7	30 VA

NOTICE

- No losses in the secondary cables are considered in the above table(s).
- No losses in the primary cables are considered in the above table(s).
- No spare CCR load has been considered in the above table(s).
- The Isolation transformer efficiency considered in the above table(s) is estimated. These efficiency values depend on the isolating transformer supplier.
- No loads due to extra equipment on the circuit (e.g. ILCMS equipment) are considered in the above table(s).
- For Reliance IQ version:

  The minimum Isolation Transformer rating is 65W.

  To allow for communication bandwidth, an overhead of 12VA should be considered when determining the Isolation Transformer rating.
- For Reliance Fail-open version:

  The maximum Isolation Transformer rating is 200W.
- If part of a Reliance 2A system:

  The data provided in the above table(s) is not applicable if part of a 2A reliance system. In this case, please contact your local ADB Safegate representative.

Appendix C: CABLE LOSS

The cable resistance R (ohms) for 1 conductor is calculated with following formula:

- R (ohms) = resistivity of material (ohm m) × length (m)/cross sectional area (m^2)
- For copper conductors the resistivity is 1.72 10-8 (m^2)

Example; for 1 km 2.5 mm^2 copper conductor, the resistance R is calculated as follows:

1.72 10-8 × 1000 / 2.5 10-6 m^2= 6.88 ohms

The loss (Watt) is then R × I^2 or 6.88 ohms × 6.6^2 A^2= 299.69 W/km or 0.299 W/m.

The loss (Watt) for a secondary cable with 2 conductors is thus 2 × 0.299 = 0.599 or 0.6 W/m.

As such we can calculate:

- Secondary cable for a 2.5 mm^2 Cu-wire (2 conductors): 0.6 W/m
- Secondary cable for a 4 mm^2 Cu-wire (2 conductors): 0.4 W/m
- Primary cable for a 6 mm^2 Cu-wire (1 conductor): 0.12 W/m

The cable between the isolation transformer and the lamp adds losses that cannot be ignored when dimensioning the circuits and selecting rating for secondary transformers and regulators.

WARNING

Cable lengths should not exceed 100 meters.

For a secondary cable of e.g., 20 m of 2.5 mm^2 CU-wire, 20 m × 0.6 W/m = 12 W equals the additional loss to be taken into account.

For a primary cable of e.g., 100 m of 6 mm^2 CU-wire, 100 m × 0.12 W/m = 12 W equals the additional loss to be taken into account.

Appendix D: SUPPORT

Our experienced engineers are available for support and service at all times, 24 hour/7 days a week. They are part of a dynamic organization making sure the entire ADB SAFEGATE is committed to minimal disturbance for airport operations.

ADB SAFEGATE Support

Live Technical Support - Americas
If at any time you have a question or concern about your product, just contact ADB SAFEGATE's technical service department. Trained in all areas of system issues, troubleshooting, quality control and technical assistance, our highly experienced Technical support specialists are available 24 hours a day, seven days a week to provide assistance over the phone.
ADB SAFEGATE **Americas Technical Service & Support (US & Canada): +1-800-545-4157**
ADB SAFEGATE Americas Technical Service & Support (International): +1-614-861-1304
During regular business hours, you can also Chat with a Service Technician. We look forward to working with you!
Before You Call
When you have an airfield lighting or system control system problem it is our goal to support airfield maintenance staff as quickly as possible. To support this effort we ask that you have the following information ready before calling.

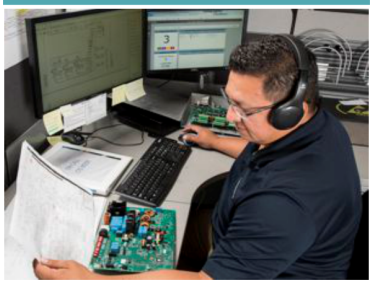

- The *airport code*
- If not with an airport, then company name (prefer customer id number)
- Contact phone number and email address
- Product with part number preferable or product number
- Have you reviewed the product's manual and troubleshooting guide
- Do you have a *True RMS* meter available (and any other necessary tools)
- Be located with the product ready to troubleshoot

Note
For more information, see www.adbsafegate.com, or contact ADB SAFEGATE Support via email at support@adbsafegate.com or
Brussels: +32 2 722 17 11
Rest of Europe: +46 (0) 40 699 17 40
Americas: +1 614 861 1304. Press 3 for technical service or press 4 for sales support.
China: +86 (10) 8476 0106

D.1 ADB SAFEGATE Website

The ADB SAFEGATE website, www.adbsafegate.com, offers information regarding our airport solutions, products, company, news, links, downloads, references, contacts and more.

D.2 Recycling

D.2.1 Local Authority Recycling

The disposal of ADB SAFEGATE products is to be made at an applicable collection point for the recycling of electrical and electronic equipment. The correct disposal of equipment prevents any potential negative consequences for the environment and human health, which could otherwise be caused by inappropriate waste handling. The recycling of materials helps to conserve natural resources. For more detailed information about recycling of products, contact your local authority city office.

D.2.2 ADB SAFEGATE Recycling

ADB SAFEGATE is fully committed to environmentally-conscious manufacturing with strict monitoring of our own processes as well as supplier components and sub-contractor operations. ADB SAFEGATE offers a recycling program for our products to all customers worldwide, whether or not the products were sold within the EU.

ADB SAFEGATE products and/or specific electrical and electronic component parts which are fully removed/separated from any customer equipment and returned will be accepted for our recycling program.

All items returned must be clearly labeled as follows:

- For *ROHS/WEEE* Recycling
- Sender contact information (Name, Business Address, Phone number).
- Main Unit Serial Number.

ADB SAFEGATE will continue to monitor and update according for any future requirements for *EU directives* as and when *EU member states* implement new *regulations* and or *amendments*. It is our aim to maintain our *compliance plan* and assist our customers.

Powering Your Airport Performance from Approach to Departure

adbsafegate.com