Flashing System Maintenance

Types FCU-3-in-1 and FCU-1-in-1

User Manual

UM-4019, Rev. 3.4.1, 2026-Oct-16

ADB SAFEGATE

A.0 Disclaimer / Standard Warranty

CE certification

The equipment listed as CE certified means that the product complies with the essential requirements concerning safety and hygiene. The European directives that have been taken into consideration in the design are available on written request to ADB SAFEGATE.

ETL certification

The equipment listed as ETL certified means that the product complies with the essential requirements concerning safety and C22.2 No.180:13 (R2018) regulations. The CSA directives that have been taken into consideration in the design are available on written request to ADB SAFEGATE.

All Products Guarantee

ADB SAFEGATE will correct by repair or replacement per the applicable guarantee below, at its option, equipment or parts which fail because of mechanical, electrical or physical defects, provided that the goods have been properly handled and stored prior to installation, properly installed and properly operated after installation, and provided further that Buyer gives ADB SAFEGATE written notice of such defects after delivery of the goods to Buyer. Refer to the Safety section for more information on Material Handling Precautions and Storage precautions that must be followed.

ADB SAFEGATE reserves the right to examine goods upon which a claim is made. Said goods must be presented in the same condition as when the defect therein was discovered. ADB SAFEGATE furthers reserves the right to require the return of such goods to establish any claim.

ADB SAFEGATE's obligation under this guarantee is limited to making repair or replacement within a reasonable time after receipt of such written notice and does not include any other costs such as the cost of removal of defective part, installation of repaired product, labor or consequential damages of any kind, the exclusive remedy being to require such new parts to be furnished.

ADB SAFEGATE's liability under no circumstances will exceed the contract price of goods claimed to be defective. Any returns under this guarantee are to be on a transportation charges prepaid basis. For products not manufactured by, but sold by ADB SAFEGATE, warranty is limited to that extended by the original manufacturer. This is ADB SAFEGATE's sole guarantee and warranty with respect to the goods; there are no express warranties or warranties of fitness for any particular purpose or any implied warranties of fitness for any particular purpose or any implied warranties other than those made expressly herein. All such warranties being expressly disclaimed.

Standard Products Guarantee

Products manufactured by ADB SAFEGATE are guaranteed against mechanical, electrical, and physical defects (excluding lamps) which may occur during proper and normal use for a period of two years from the date of ex-works delivery, and are guaranteed to be merchantable and fit for the ordinary purposes for which such products are made.

Note

See your applicable sales agreement for a complete warranty description.

Replaced or repaired equipment under warranty falls into the warranty of the original delivery. No new warranty period is started for these replaced or repaired products.

FAA Certified products manufactured by ADB SAFEGATE

ADB SAFEGATE L858 Airfield Guidance Signs are warranted against mechanical and physical defects in design or manufacture for a period of 2 years from date of installation, per FAA AC 150/5345-44 (applicable edition).

ADB SAFEGATE LED products (with the exception of obstruction lighting) are warranted against electrical defects in design or manufacture of the LED or LED specific circuitry for a period of 4 years from date of installation, per FAA EB67 (applicable edition). These FAA certified constant current (series) powered LED products must be installed, interfaced and powered with and through products certified under the FAA Airfield Lighting Equipment Program (ALECP) to be included in this 4 (four) year warranty. This includes, but is not limited to, interface with products such as Base Cans, Isolation Transformers, Connectors, Wiring, and Constant Current Regulators.

Copyright ©2008—2026 ADB SAFEGATE, All Rights Reserved

Note

See your sales order contract for a complete warranty description.

Replaced or repaired equipment under warranty falls into the warranty of the original delivery. No new warranty period is started for these replaced or repaired products.

Liability

WARNING

Use of the equipment in ways other than described in the catalog leaflet and the manual may result in personal injury, death, or property and equipment damage. Use this equipment only as described in the manual.

ADB SAFEGATE cannot be held responsible for injuries or damages resulting from non-standard, unintended uses of its equipment. The equipment is designed and intended only for the purpose described in the manual. Uses not described in the manual are considered unintended uses and may result in serious personal injury, death or property damage.

Unintended uses, includes the following actions:

- Making changes to equipment that have not been recommended or described in this manual or using parts that are not genuine ADB SAFEGATE replacement parts or accessories.
- Failing to make sure that auxiliary equipment complies with approval agency requirements, local codes, and all applicable safety standards if not in contradiction with the general rules.
- Using materials or auxiliary equipment that are inappropriate or incompatible with your ADB SAFEGATE equipment.
- Allowing unskilled personnel to perform any task on or with the equipment.

Copyright Statement

This manual or parts thereof may not be reproduced, stored in a retrieval system, or transmitted, in any form or by any means, electronic, mechanical, photocopying, recording, nor otherwise, without the author's prior written consent.

This manual could contain technical inaccuracies or typographical errors. The author reserves the right to revise this manual from time to time in the contents thereof without obligation of the author to notify any person of such revision or change. Details and values given in this manual are average values and have been compiled with care. They are not binding, however, and the author disclaims any liability for damages or detriments suffered as a result of reliance on the information given herein or the use of products, processes or equipment to which this manual refers. No warranty is made that the use of the information or of the products, processes or equipment to which this manual refers will not infringe any third party's patents or rights. The information given does not release the buyer from making their own experiments and tests.

Copyright ©2008—2026 ADB SAFEGATE, All Rights Reserved

Table of Contents

1.0 Safety ... 1
1.1 Safety Messages ... 1
1.1.1 Introduction to Safety ... 2
1.1.2 Intended Use ... 2
1.1.3 Material Handling Precautions: Storage ... 3
1.1.4 Material Handling: Heavy Equipment ... 3
1.1.5 Material Handling Precautions: Fasteners ... 3
1.1.6 Operation Safety ... 4
1.1.7 Laser Safety Information ... 4
1.1.8 Maintenance Safety ... 6
1.1.9 Material Handling Precautions, ESD ... 6
1.1.10 Arc Flash and Electric Shock Hazard ... 7

2.0 About this Manual ... 9
2.1 How to work with the Manual ... 9
2.2 Abbreviations and Terms ... 9

3.0 Introduction ... 11
3.1 Flashing System Overview ... 11
3.2 Lay-out of the Equipment Cabinets ... 11
3.2.1 FCU-1 ... 12
3.2.2 FCU-3 ... 13
3.2.3 LMC ... 14
3.3 Intended Use ... 14
3.4 Description ... 14
3.5 Local Master Controller (LMC) Description ... 15
3.6 Options ... 16
3.7 Remote Control Description (option) ... 16

4.0 Commissioning ... 17
4.1 Main Commissioning Procedure ... 17
4.2 Configure the FCU PCBs ... 17
4.2.1 Set the Communication Parameters ... 17
4.2.2 Define the Equipment Address ... 18
4.3 Configure the Flashing System ... 19
4.3.1 General Procedure ... 20
4.3.2 Manual Configuration ... 20
4.3.3 Configuration with the Configuration Software Tool ... 21
4.4 Remote Control Configuration: Multiwire (Option) ... 26
4.5 Remote Control Configuration: J-Bus (Option) ... 27
4.5.1 General Procedure ... 27
4.5.2 Set binary Address of LMC ... 28
4.5.3 Set Slave Address ... 28
4.5.4 Set two/four Wire Communication ... 28
4.5.5 Check Connection ... 28
4.6 Commissioning Records ... 28
4.6.1 Use Tables ... 29
4.6.2 Commissioning Record Tables ... 29
4.6.3 J-bus Settings Table (Option) ... 30
4.6.4 Multiwire Settings Table (Option) ... 30

5.0 Maintenance ... 33
5.1 Preventive Maintenance Schedule ... 33
5.2 Part Replacement ... 33
5.2.1 Required Tools ... 34
5.2.2 Prepare: Switch OFF Power Supply ... 34
5.2.3 FCU-3 PCB at left or right of Equipment Cabinet ... 35
5.2.4 FCU-1 PCB or FCU-3 middle PCB ... 37
5.2.5 LMC PCB ... 38
5.2.6 Multiwire PCB ... 40
5.2.7 Multiwire Cable ... 41

Copyright ©2008—2026 ADB SAFEGATE, All Rights Reserved

5.2.8 J-Bus PCB ... 42
5.2.9 Capacitor ... 43
5.2.10 DC Power Supply ... 44
5.2.11 Door Micro-switch ... 45
5.2.12 Local Bus Connection Board ... 46
5.2.13 Wiring Assembly ... 47
5.2.14 Cable Entry Kit with Bottom ... 51
5.2.15 Choke ... 52
5.2.16 Mains Filter ... 52
5.2.17 Overvoltage Protection Cartridge (MOV) ... 53
5.2.18 Remove Covers ... 53

6.0 Troubleshooting ... 55
6.1 Preliminary Checks ... 55
6.2 Troubleshooting Guide ... 55

7.0 Checks and Measurements ... 59
7.1 Check Fuse Breaker and Voltage of Switch Board ... 59
7.2 Prepare to check Flashing System ... 59
7.3 Check AC Power ... 59
7.4 Check Equipment Cabinet with LMC ... 60
7.5 Check Equipment Cabinet without LMC ... 61
7.6 Check Flashing Sequence ... 62
7.7 Measure Power Draw ... 62

8.0 Configuration Software Tool ... 65
8.1 Install Configuration Software Tool on a PC ... 65
8.1.1 Requirements ... 65
8.1.2 Install Software ... 65
8.2 Start Configuration Software Tool ... 65
8.2.1 Connect cables ... 65
8.2.2 Start software ... 66
8.3 Upload new Firmware ... 66
8.4 Description of Screens and Menus ... 69
8.4.1 Configuration Software Tool Screen ... 69
8.4.2 Control Menu ... 70
8.4.3 Mode Menu ... 70
8.4.4 Flasher Data Menu ... 70
8.4.5 IO Menu ... 73
8.4.6 Timing Menu ... 73
8.4.7 Save Menu ... 73
8.4.8 Layout Menu ... 73
8.4.9 Configuration Menu ... 74

9.0 PCB Drawings and Settings ... 75
9.1 FCU - PCB1487 ... 75
9.1.1 Layout of the Printed Circuit Board (PCB) ... 75
9.1.2 Connectors ... 75
9.1.3 Straps ... 77
9.1.4 Dip-switches ... 78
9.1.5 LEDs ... 79
9.2 Local Bus Connection Board - PCB1498 ... 79
9.2.1 Layout of the Printed Circuit Board (PCB) ... 79
9.2.2 Connectors ... 79
9.3 Local Master Controller (LMC) - PCB1513 ... 80
9.3.1 Layout of the Printed Circuit Board (PCB) ... 80
9.3.2 Straps ... 80
9.3.3 Rotary and Dip-switches ... 81
9.3.4 LEDs ... 83
9.4 Multiwire - PCB1486 ... 83
9.4.1 Layout of the Printed Circuit Board (PCB) ... 84
9.4.2 Straps ... 84
9.4.3 Connectors ... 84
9.4.4 Input Terminals ... 84

Copyright ©2008—2026 ADB SAFEGATE, All Rights Reserved

9.4.5 Output Terminals ... 86
9.4.6 Control Signals ... 87
9.4.7 Multiwire Default Settings ... 87
9.5 J-Bus Connection - PCB1502 ... 88
9.5.1 Layout of the Printed Circuit Board (PCB) ... 89
9.5.2 Connectors ... 90
9.5.3 Slave Connections ... 90
9.6 Dongle ... 90
9.6.1 Dip-switches ... 91
9.6.2 LEDs ... 91
9.7 Wiring Diagrams ... 91
10.0 Technical Data ... 93
10.1 Technical Characteristics ... 93
10.2 Ambient Conditions ... 93
10.3 Parts List ... 93
10.3.1 General ... 93
10.3.2 General Parts ... 94
10.3.3 LMC and Remote Control Parts ... 95
10.3.4 Optional Parts ... 95
A.0 Support ... 97
A.1 ADB SAFEGATE Website ... 98
A.2 Recycling ... 99
A.2.1 Local Authority Recycling ... 99
A.2.2 ADB SAFEGATE Recycling ... 99

Copyright ©2008—2026 ADB SAFEGATE, All Rights Reserved

List of Figures

List of Tables

Table 1: Terms and abbreviations ... 9
Table 2: Multiwire Options ... 16
Table 3: Dip-switch bank SW2 of the LMC PCB ... 21
Table 4: Commissioning record tables - general ... 29
Table 5: Commissioning record tables - flasher head 1 to 11 ... 29
Table 6: Commissioning record tables - flasher head 12 to 22 ... 29
Table 7: Commissioning record tables - flasher head 23 to 32 ... 30
Table 8: Customized back-indication signals ... 30
Table 9: Customized remote control signals ... 31
Table 10: Preventive maintenance schedule ... 33
Table 11: Troubleshooting guide ... 55
Table 12: Screen structure ... 69
Table 13: Control menu ... 70
Table 14: Mode menu ... 70
Table 15: Status menu ... 70
Table 16: Active state menu ... 70
Table 17: Misfire state and counter menu ... 71
Table 18: Flasher counter menu ... 71
Table 19: Flasher temperature menu ... 71
Table 20: Flasher security menu ... 71
Table 21: Flasher steps menu ... 72
Table 22: Software version menu ... 72
Table 23: Read communication counters menu ... 72
Table 24: Read flasher counters menu ... 72
Table 25: IO menu ... 73
Table 26: Timing menu ... 73
Table 27: Save menu ... 73
Table 28: Layout menu ... 74
Table 29: Configuration menu ... 74
Table 30: FCU PCB connectors ... 75
Table 31: Wire connections for TB2 for UEL type flasher head ... 76
Table 32: Wire connections for TB2 for FFL type flasher head ... 76
Table 33: FCU straps ... 77
Table 34: Resistor settings ... 77
Table 35: FCU PCB dip-switch settings ... 78
Table 36: Functions ... 79
Table 37: Local bus connectors ... 79
Table 38: LMC PCB straps ... 80
Table 39: LMC PCB dip-switch settings ... 81
Table 40: Functions ... 83
Table 41: Multiwire PCB straps ... 84
Table 42: Multiwire PCB connectors ... 84
Table 43: Functions for connector P ... 85
Table 44: Connection P2 wires, per power supply type ... 85
Table 45: Functions for connector P1 ... 86
Table 46: Connect P1 wires, per power supply type ... 87
Table 47: Multiwire options ... 87

Copyright ©2008—2026 ADB SAFEGATE, All Rights Reserved

Table 48: Default back-indication signals 88
Table 49: Default remote control signals 88
Table 50: J-Bus connectors 90
Table 51: Wiring for connectors P1-P4 90
Table 52: Technical characteristics 93
Table 53: Ambient conditions 93

Copyright ©2008—2026 ADB SAFEGATE, All Rights Reserved

Copyright ©2008—2026 ADB SAFEGATE, All Rights Reserved

1.0 Safety

Introduction to Safety

This section contains general safety instructions for installing and using ADB SAFEGATE equipment. Some safety instructions may not apply to the equipment in this manual. Task- and equipment-specific warnings are included in other sections of this manual where appropriate.

1.1 Safety Messages

HAZARD Icons used in this manual

For all HAZARD symbols in use, see the Safety section. All symbols must comply with ISO and ANSI standards.

Carefully read and observe all safety instructions in this manual, which alert you to safety hazards and conditions that may result in personal injury, death or property and equipment damage and are accompanied by the symbols shown below.

	WARNING Failure to observe a warning may result in personal injury, death or equipment damage.
	DANGER – Risk of electrical shock or ARC FLASH Disconnect equipment from line voltage. Failure to observe this warning may result in personal injury, death, or equipment damage. ARC Flash may cause blindness, severe burns or death.
	WARNING – Wear personal protective equipment Failure to observe may result in serious injury.
	WARNING – Do not touch Failure to observe this warning may result in personal injury, death, or equipment damage.
	CAUTION Failure to observe a caution may result in equipment damage.
	ELECTROSTATIC SENSITIVE DEVICES This equipment may contain electrostatic devices.

Qualified Personnel

	Important Information The term **qualified personnel** is defined here as individuals who thoroughly understand the equipment and its safe operation, maintenance and repair. Qualified personnel are physically capable of performing the required tasks, familiar with all relevant safety rules and regulations and have been trained to safely install, operate, maintain and repair the equipment. It is the responsibility of the company operating this equipment to ensure that its personnel meet these requirements. Always use required personal protective equipment (PPE) and follow safe electrical work practice.

Copyright ©2008—2026 ADB SAFEGATE, All Rights Reserved

1.1.1 Introduction to Safety

CAUTION

Unsafe Equipment Use
This equipment may contain electrostatic devices, hazardous voltages and sharp edges on components

- Read installation instructions in their entirety before starting installation.
- Become familiar with the general safety instructions in this section of the manual before installing, operating, maintaining or repairing this equipment.
- Read and carefully follow the instructions throughout this manual for performing specific tasks and working with specific equipment.
- Make this manual available to personnel installing, operating, maintaining or repairing this equipment.
- Follow all applicable safety procedures required by your company, industry standards and government or other regulatory agencies.
- Install all electrical connections to local code.
- Use only electrical wire of sufficient gauge and insulation to handle the rated current demand. All wiring must meet local codes.
- Route electrical wiring along a protected path. Make sure they will not be damaged by moving equipment.
- Protect components from damage, wear, and harsh environment conditions.
- Allow ample room for maintenance, panel accessibility, and cover removal.
- Protect equipment with safety devices as specified by applicable safety regulations
- If safety devices must be removed for installation, install them immediately after the work is completed and check them for proper functioning prior to returning power to the circuit.

Failure to follow these instructions can result in serious injury, death or equipment damage

Additional Reference Materials

Important Information

- IEC – International Standards and Conformity Assessment for all electrical, electronic and related technologies.
- IEC 60364 – Electrical Installations in Buildings.
- CSA – C22.2 No.180:13 (R2018), series isolating transformers for airport lighting.
- FAA Advisory: AC 150/5340-26 (current edition), Maintenance of Airport Visual Aid Facilities.
- Maintenance personnel must refer to the maintenance procedure described in the ICAO Airport Services Manual, Part 9.
- ANSI/NFPA 79, Electrical Standards for Metalworking Machine Tools.
- National and local electrical codes and standards.

1.1.2 Intended Use

CAUTION

Use this equipment as intended by the manufacturer
This equipment is designed to perform a specific function, do not use this equipment for other purposes

- Using this equipment in ways other than described in this manual may result in personal injury, death or property and equipment damage. Use this equipment only as described in this manual.

Failure to follow this instruction can result in serious injury or equipment damage

Copyright ©2008—2026 ADB SAFEGATE, All Rights Reserved

1.1.3 Material Handling Precautions: Storage

CAUTION

Improper Storage
Store this equipment properly

- If equipment is to be stored prior to installation, it must be protected from the weather elements and kept free of condensation and dust.

Failure to follow this instruction can result in equipment damage

1.1.4 Material Handling: Heavy Equipment

DANGER

UNSTABLE LOAD
USE CAUTION WHEN MOVING HEAVY EQUIPMENT

- USE EXTREME CARE WHEN MOVING HEAVY EQUIPMENT.
- VERIFY THAT THE MOVING EQUIPMENT IS RATED TO HANDLE THE WEIGHT.
- WHEN REMOVING EQUIPMENT FROM A SHIPPING PALLET, CAREFULLY BALANCE AND SECURE IT USING A SAFETY STRAP.

FAILURE TO FOLLOW THIS INSTRUCTION CAN RESULT IN DEATH, SERIOUS INJURY, OR EQUIPMENT DAMAGE

1.1.5 Material Handling Precautions: Fasteners

DANGER

FOREIGN OBJECT DAMAGE - FOD
THIS EQUIPMENT MAY CONTAIN FASTENERS THAT CAN LOOSEN UNLESS TORQUED PROPERLY.

- ONLY USE FASTENERS OF THE SAME TYPE AS ORIGINALLY SUPPLIED WITH THE EQUIPMENT.
- USE OF INCORRECT COMBINATION OF GASKETS, BOLTS AND NUTS CAN CAUSE SEVERE DAMAGE TO THE PRODUCT AND CREATE MULTIPLE SAFETY RISKS .
- YOU NEED TO KNOW WHAT BASE THE LIGHT FIXTURE WILL BE INSTALLED IN, IN ORDER TO CHOOSE THE CORRECT GASKET, BOLTS AND NUTS.
- BOLT TYPE, LENGTH, AND TORQUE VALUE ARE DETERMINED BY TYPE OF BASE, HEIGHT OF SPACERS USED, AND CLAMP FORCE REQUIRED IN FAA ENGINEERING BRIEF NO 83 (LATEST REVISION).
- USE ONLY ANTI-VIBRATION WASHERS WITH THE FIXING BOLTS AS DEFINED IN FAA EB 83 (LATEST EDITION) TO AVOID THE RISK OF LOOSENING BOLTS . DO NOT USE OF ANY OTHER TYPE OF WASHER (SUCH AS SPLIT-LOCK WASHERS). FOR INSTALLATION OTHER THAN FAA, USE THE BASE CAN MANUFACTURER'S RECOMMENDATIONS.
- ALWAYS TIGHTEN THE FASTENERS TO THE RECOMMENDED TORQUE USING A CALIBRATED TORQUE WRENCH.
- APPLY THE RECOMMENDED TYPE OF ADHESIVE AND FOLLOW THE ADHESIVE INSTRUCTIONS CAREFULLY.

FAILURE TO FOLLOW THESE WARNINGS MAY CAUSE THE FASTENERS TO LOOSEN, POSSIBLY DAMAGING THE EQUIPMENT. THIS CAN LEAD TO THE HIGHLY DANGEROUS SITUATION OF FOD, WITH POTENTIALLY LETHAL CONSEQUENCES.

Note

To minimize the risk of errors, the ADB SAFEGATE Sales Representative will have information on which gasket goes with which base. This information is also provided in the product Data sheets, the User Manuals and the Spare Part Lists.

Copyright ©2008—2026 ADB SAFEGATE, All Rights Reserved

1.1.6 Operation Safety

CAUTION

Improper Operation
Do Not Operate this equipment other than as specified by the manufacturer

- Only qualified personnel, physically capable of operating the equipment and with no impairments in their judgment or reaction times, should operate this equipment.
- Read all system component manuals before operating this equipment. A thorough understanding of system components and their operation will help you operate the system safely and efficiently.
- Before starting this equipment, check all safety interlocks, fire-detection systems, and protective devices such as panels and covers. Make sure all devices are fully functional. Do not operate the system if these devices are not working properly. Do not deactivate or bypass automatic safety interlocks or locked-out electrical disconnects or pneumatic valves.
- Protect equipment with safety devices as specified by applicable safety regulations.
- If safety devices must be removed for installation, install them immediately after the work is completed and check them for proper functioning.
- Route electrical wiring along a protected path. Make sure they will not be damaged by moving equipment.
- Never operate equipment with a known malfunction.
- Do not attempt to operate or service electrical equipment if standing water is present.
- Use this equipment only in the environments for which it is rated. Do not operate this equipment in humid, flammable, or explosive environments unless it has been rated for safe operation in these environments.
- Never touch exposed electrical connections on equipment while the power is ON.

Failure to follow these instructions can result in serious injury, death or equipment damage.

1.1.7 Laser Safety Information

Safedock system is an Advanced Visual Docking Guidance System, an aircraft parking aid for airport and aircraft safety and efficiency. The design is according to strict airport industry standards for the safety of, and use by authorized airport personnel.

CAUTION

The chapter Operating Procedures must be distributed to all airlines using the system.

- Airport Operations, Maintenance and other Authorized Personnel
- This information is a summary of the safety requirements on operation and maintenance personnel based on general electrical and laser safety precautions.

CAUTION

It is very important for authorized personnel to study this section before any operation or maintenance work on the system is commenced.

- Safedock system should only be used by airport operations and maintenance personnel who have been properly trained in the use of the system. ADB SAFEGATE takes no responsibility for incorrect use of the system. All warnings contained in the text of this manual must be strictly observed.
- Airport operations and maintenance personnel are strongly advised to observe the following symbols and safety advisories.

Copyright ©2008—2026 ADB SAFEGATE, All Rights Reserved

CAUTION

Laser Safety
Store this equipment properly

- Safedock system is a Class 1 laser product, which means that it is safe under foreseeable conditions of operation, including the use of optical instruments for infra beam viewing.
- The Laser Scanning Unit compartment of the Pilot Display unit contains a Laser Range Finder, which is a Class 1M laser product. A Class 1M laser product is safe under foreseeable conditions of operation, but may be hazardous, if the user employs optical instruments within the beam, e.g. binoculars or telescope.

Failure to follow this instruction can result in permanent eye injury.

CAUTION

Invisible Laser Radiation
Store this equipment properly

- The laser output from this system is within Class 1 limits (USA FDA 21 CFR 1040.10 – 11 and IEC 60825-1:2014 (Third Edition) as long as the range finder is installed and operated as specified by ADB SAFEGATE.
- If operated in any other fashion than described, the range finder is capable of emitting radiation up to Class 1M limits.

Failure to follow this instruction can result in permanent eye injury.

CAUTION

Eye Safety
Store this equipment properly

- ADB SAFEGATE accepts no liability for the misuse of its equipment or for the consequences of this misuse.
- ADB SAFEGATE recommends that eye safety procedures be followed in accordance with ANSI Z136.1 – 1993 or IEC 60825-1 during maintenance.
- The laser beam exiting the window of the Safedock enclosure is within Class 1 limit for eye safety, when the product is operated as specified by ADB SAFEGATE.
- To provide eye safety the user is advised to treat this laser unit as a Class 1 M laser product. Class 1 M denotes lasers or laser systems that can produce a hazard if viewed through light collecting optics such as binoculars.

Failure to follow this instruction can result in permanent eye injury.

Copyright ©2008—2026 ADB SAFEGATE, All Rights Reserved

Laser Information

For the laser the following values apply:

- Pulse width ~ 10 ns
- Wavelength 905 nm

CAUTION

If the laser by any reason should be switched on and used outside the docking system, safety procedures may include, but are not necessarily limited to the following:

- Do not stare into the laser beam.
- Do not view the beam with binoculars or other devices that collect light.
- Do not point the laser at people.

CAUTION

Do not point the laser range finder at the sun.

1.1.8 Maintenance Safety

DANGER

ELECTRIC SHOCK HAZARD

THIS EQUIPMENT MAY CONTAIN ELECTROSTATIC DEVICES

- DO NOT OPERATE A SYSTEM THAT CONTAINS MALFUNCTIONING COMPONENTS. IF A COMPONENT MALFUNCTIONS, TURN THE SYSTEM OFF IMMEDIATELY.
- DISCONNECT AND LOCK OUT ELECTRICAL POWER.
- ALLOW ONLY QUALIFIED PERSONNEL TO MAKE REPAIRS OR REPLACE MALFUNCTIONING COMPONENTS ACCORDING TO INSTRUCTIONS PROVIDED IN MANUAL.

FAILURE TO FOLLOW THESE INSTRUCTIONS CAN RESULT IN DEATH OR EQUIPMENT DAMAGE

1.1.9 Material Handling Precautions, ESD

CAUTION

Electrostatic Sensitive Devices

This equipment may contain electrostatic devices

- Protect from electrostatic discharge.
- Electronic modules and components should be touched only when this is unavoidable e.g. soldering, replacement.
- Before touching any component of the cabinet you shall bring your body to the same potential as the cabinet by touching a conductive earthed part of the cabinet.
- Electronic modules or components must not be brought in contact with highly insulating materials such as plastic sheets, synthetic fiber clothing. They must be laid down on conductive surfaces.
- The tip of the soldering iron must be grounded.
- Electronic modules and components must be stored and transported in conductive packing.

Failure to follow this instruction can result in equipment damage

Copyright ©2008—2026 ADB SAFEGATE, All Rights Reserved

1.1.10 Arc Flash and Electric Shock Hazard

DANGER

SERIES CIRCUITS HAVE HAZARDOUS VOLTAGES
THIS EQUIPMENT PRODUCES HIGH VOLTAGES TO MAINTAIN THE SPECIFIED CURRENT - DO NOT DISCONNECT WHILE ENERGIZED.

- ALLOW ONLY QUALIFIED PERSONNEL TO PERFORM MAINTENANCE, TROUBLESHOOTING, AND REPAIR TASKS.
- ONLY PERSONS WHO ARE PROPERLY TRAINED AND FAMILIAR WITH ADB SAFEGATE EQUIPMENT ARE PERMITTED TO SERVICE THIS EQUIPMENT.
- AN OPEN AIRFIELD CURRENT CIRCUIT IS CAPABLE OF GENERATING >5000 VAC AND MAY APPEAR OFF TO A METER.
- NEVER UNPLUG A DEVICE FROM A CONSTANT CURRENT CIRCUIT WHILE IT IS OPERATING; ARC FLASH MAY RESULT.
- DISCONNECT AND LOCK OUT ELECTRICAL POWER.
- ALWAYS USE SAFETY DEVICES WHEN WORKING ON THIS EQUIPMENT.
- FOLLOW THE RECOMMENDED MAINTENANCE PROCEDURES IN THE PRODUCT MANUALS.
- DO NOT SERVICE OR ADJUST ANY EQUIPMENT UNLESS ANOTHER PERSON TRAINED IN FIRST AID AND CPR IS PRESENT.
- CONNECT ALL DISCONNECTED EQUIPMENT GROUND CABLES AND WIRES AFTER SERVICING EQUIPMENT. GROUND ALL CONDUCTIVE EQUIPMENT.
- USE ONLY APPROVED ADB SAFEGATE REPLACEMENT PARTS. USING UNAPPROVED PARTS OR MAKING UNAPPROVED MODIFICATIONS TO EQUIPMENT MAY VOID AGENCY APPROVALS AND CREATE SAFETY HAZARDS.
- CHECK THE INTERLOCK SYSTEMS PERIODICALLY TO ENSURE THEIR EFFECTIVENESS.
- DO NOT ATTEMPT TO SERVICE ELECTRICAL EQUIPMENT IF STANDING WATER IS PRESENT. USE CAUTION WHEN SERVICING ELECTRICAL EQUIPMENT IN A HIGH-HUMIDITY ENVIRONMENT.
- USE TOOLS WITH INSULATED HANDLES WHEN WORKING WITH AIRFIELD ELECTRICAL EQUIPMENT.

FAILURE TO FOLLOW THESE INSTRUCTIONS CAN RESULT IN DEATH OR EQUIPMENT DAMAGE

Copyright ©2008—2026 ADB SAFEGATE, All Rights Reserved

Copyright ©2008—2026 ADB SAFEGATE, All Rights Reserved

2.0 About this Manual

This document includes information with focus on safety, installation and maintenance procedures.

For more information, see www.adbsafegate.com.

Note

It is very important to read this document before any work is started.

The manual covers commissioning and carry out maintenance of the following:

- FCU-1 and FCU-3

If in the manual the term equipment used, this refers to both the FCU-1 and FCU-3.

2.1 How to work with the Manual

- Familiarize yourself with the structure and content.
- Carry out the actions completely and in the given sequence.

2.2 Abbreviations and Terms

Table 1: Terms and abbreviations

Abbreviation and term	Description
AC	Alternating Current
ALFS-1	Flashing mode: Approach Light System with Sequenced Flasher heads (ILS Cat- I configuration)
ALFS-2	Flashing mode: Approach Light System with Sequenced Flasher heads (ILS Cat-II configuration)
AWG	American Wire Gauge
Binary notation	All data in the digital circuits is treated using “1” and “0”. Thus, all decimal notations are transcripted into binary notations.
CPU	Central processing unit
DC	Direct Current
E^2PROM	Electronically Erasable Programmable Read-Only Memory
Equipment	Both FCU-1 and FCU-3, if the information is the same
FAA	Federal Aviation Administration
Fastener	Generic term for an item that holds the equipment together or that holds the equipment on its mounting support, e.g. nut, bolt, washer
FCU	Flasher Control Unit
FE-LiYCY	A type of flexible multi-core cable
FFL	ADB type inset flashing head
Flasher head	An elevated or inset flashing light
Flasher unit	A combination of flashing electronics and flasher head
Flashing rhythm	The rhythm in which the flashing system flashes. The flashing rhythm consists of two elements: cycle time and sequence time.

Copyright ©2008—2026 ADB SAFEGATE, All Rights Reserved

Table 1: Terms and abbreviations

Abbreviation and term	Description
Flashing system	A number of flashing units operating as an RTILS or sequenced flashing system
Hexadecimal notation	This is a way to write numbers in base of 16, instead of the standard 10. In the manual, it is used for bits and addresses, because it identifies better the active data address or data lines (16 or 8-bit large).
ICAO	International Civil Aviation Organisation
IGBT	Isolated Gate Bipolar Transistor
LMC	Local Master Controller
Local bus	The communication bus, which exchanges data and control signals between the FCUs and the LMC.
MALSF	Flashing mode: Medium-intensity Approach Lighting System with Sequenced Flasher heads
MALSR	Flashing mode: Medium-intensity Approach Lighting System with Runway alignment indicator
Mod bus	The communication bus, which communicates with the customer control system.
MOV	Metal-Oxide Varistor
MW	Multiwire
ODALS	Omni Directional Approach Lighting System
PC	Personal Computer
PCB	Printed Circuit Board
PCMCIA	Personal Computer Memory Card International Association
PE	Protective Earth
PU	PolyUrethane
RC circuit	Circuit wit a resistance and a capacity
REILS	Runway End Identification Lighting System
RTILS	Runway Threshold Identification Lighting System
SMPS	Switched Mode Power Supply
SSALR	Flashing mode: Simplified Short Approach Lighting System with Runway alignment indicator
SSALS	Flashing mode: Simplified Short Approach Lighting System with Sequenced flasher heads
TWAVBI	Type of armored multiwire underground signalization cable
UEL	Unidirectional Elevated Light type (ADB type elevated flashing head)
WAGO	Brand of spring leaf connectors

Copyright ©2008—2026 ADB SAFEGATE, All Rights Reserved

3.0 Introduction

3.1 Flashing System Overview

The illustration shows a schematic overview of the components of a flashing system. The design plan shows the actual lay-out. A flashing system can contain up to 32 flashing heads.

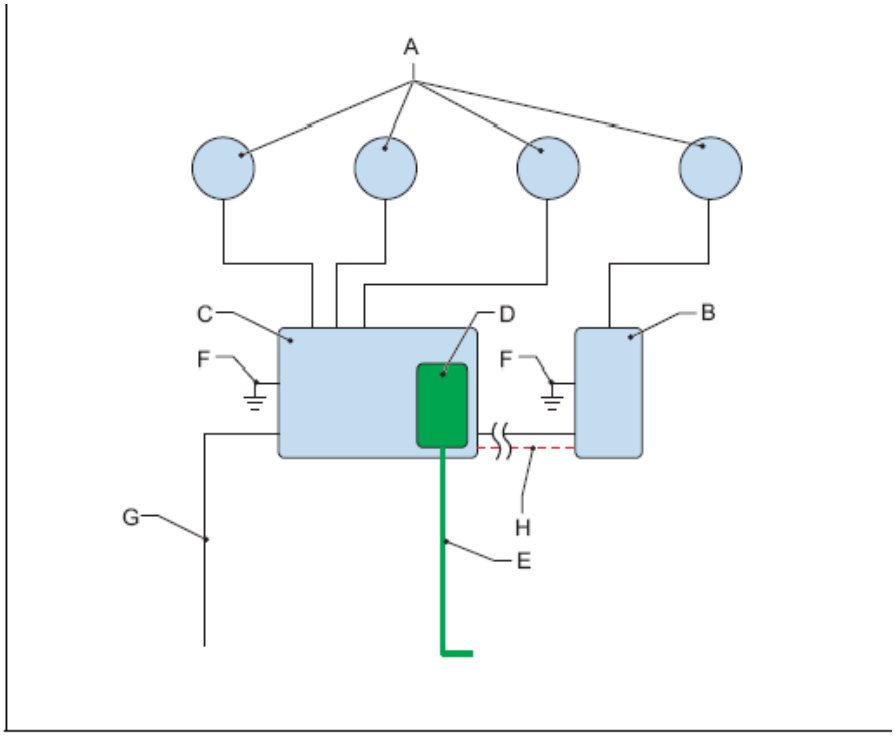

Main items

A	Flashing head
B	FCU-1
C	FCU-3
D	Local Master Controller (LMC) PCB
E	Interface to remote control
F	Earthing/Counterpoise system connection
G	Power cable (parallel system)
H	Local bus

Every flashing system has one LMC. The LMC can be installed in an FCU-1 cabinet or in a FCU- 3 cabinet.

3.2 Lay-out of the Equipment Cabinets

Copyright ©2008—2026 ADB SAFEGATE, All Rights Reserved

3.2.1 FCU-1

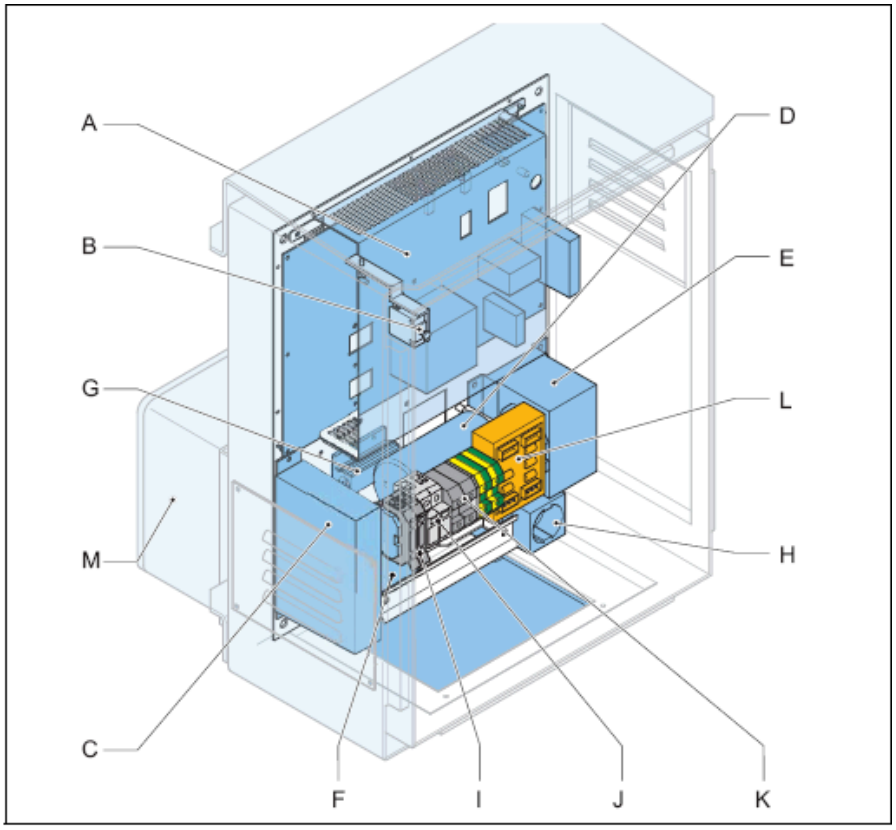

Main items

A	FCU PCB
B	Door micro switch
C	DC power supply module
D	Capacitor
E	Choke
F	Mains filter
G	Heater resistance
H	Mains socket outlet (option)
I	Fused input switch (F1)
J	Over-voltage protection modules (MOV) (option)
K	Power input terminals
L	Local bus connection board
M	Junction box (option)

Copyright ©2008—2026 ADB SAFEGATE, All Rights Reserved

3.2.2 FCU-3

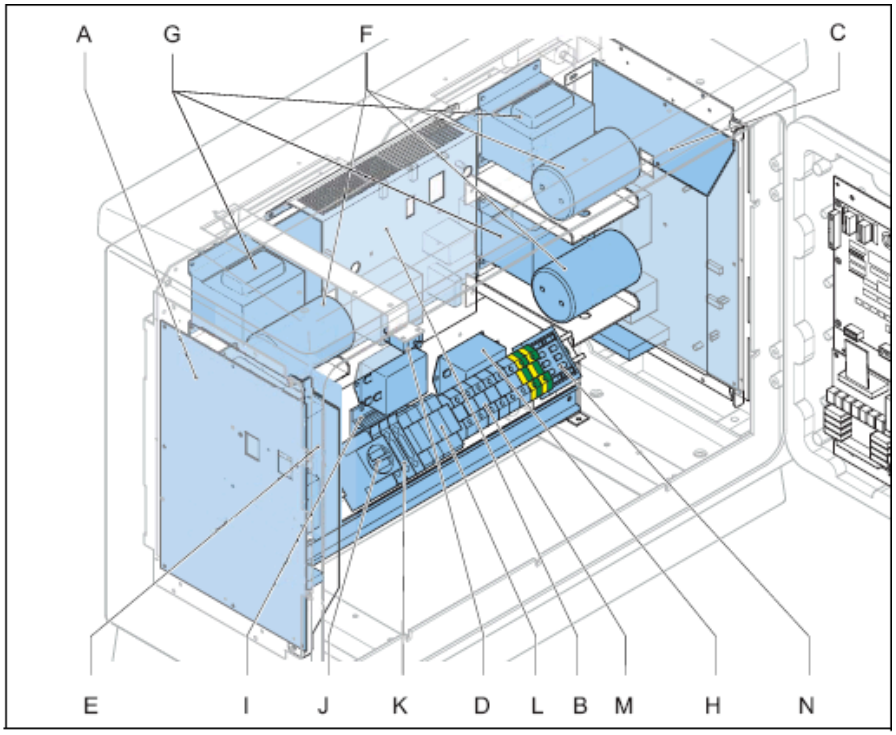

Main items

A	FCU PCB left
B	FCU PCB middle
C	FCU PCB right
D	Door micro switch
E	DC power supply module
F	Capacitor (x3)
G	Choke (x3)
H	Mains filter (x3)
I	Heater resistance
J	Mains socket outlet (option)
K	Fuses (F1, F2 and F3)
L	Over-voltage protection modules (MOV) (option)
M	Power input terminals
N	Local bus connection board

Copyright ©2008—2026 ADB SAFEGATE, All Rights Reserved

3.2.3 LMC

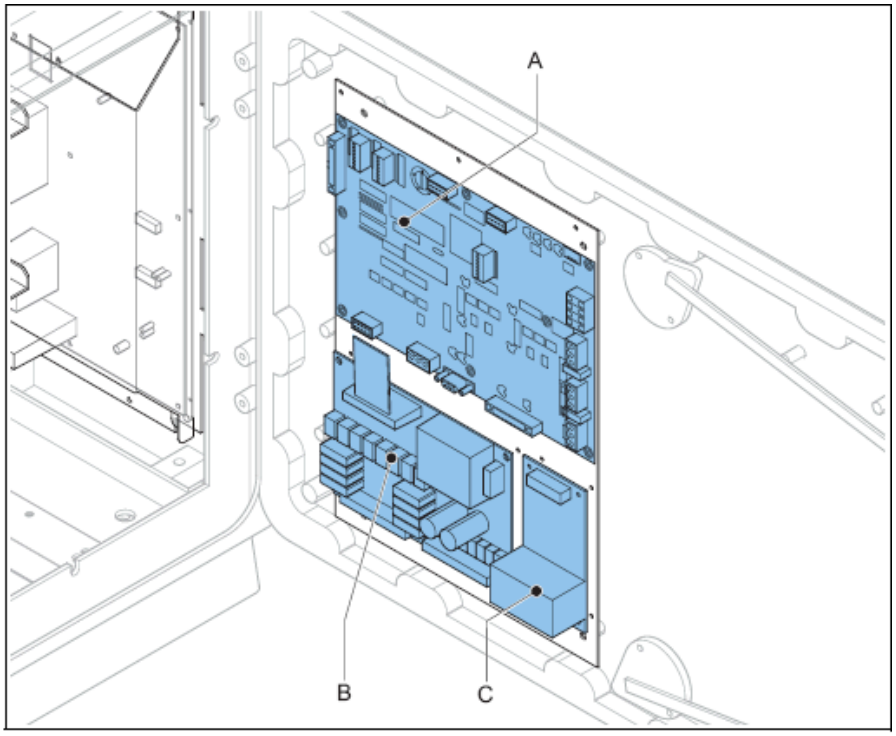

Main items	A	Local Master Controller (one per complete flashing system)	B	Multiwire interface (option)
			C	J-Bus interface (option)

3.3 Intended Use

The equipment is designed to control flashes of UEL or FFL type flasher heads.

The flasher heads operate at an approach or a threshold area in sequenced flashing approach lighting systems or RTILS (REILS) at airports.

The flasher heads flash in a predefined sequence, interval and repetition rate.

Each flash unit that has a fitting needs a separate FCU PCB.

3.4 Description

Introduction

The equipment cabinets in the flashing system exist in two variants:

- FCU-1: one cabinet with one FCU for a single flash unit; single-phase power supply;
- FCU-3: one cabinet with three FCUs for 3 flash units: three-phase power supply.

  It is possible to combine these two types of cabinets in one system. Then, FCU-1 cabinets must have a separate junction box (option) to connect to the three-phase power supply.

  It is possible to connect the FCU-3 in a single-phase power supply. Then the number of flash units is limited to an RTILS.

  Each equipment is an autonomous device and receives an unique sequence number that serves as a logical address.

  The maximum number of equipments in a flashing system that is controlled by one LMC is 32.

Frangibility

The mounting support of the equipment is not frangible, due to the mass of the equipment cabinet and the electrical cables. Install the equipment outside the safety area of the approach. This means there is an increase in distance between the equipment and the flasher head. The equipment compensates for losses in the cable between the flasher head and the equipment, provided that that you use cables with the correct cable cross sections.

FCU PCB

The FCU PCB in every equipment:

Copyright ©2008—2026 ADB SAFEGATE, All Rights Reserved

- Receives input messages from the LMC and is connected with the separate equipments through the local bus connection;
- Charges the flash capacitor;
- Monitors the discharge current and misfires through the lamp;
- Enables three lamp brightness levels to be adjusted.

LMC

Each equipment operates as a slave and is connected to a LMC. For a description of the LMC, see § 3.5.

Lightning Protection

The equipment cabinets may have an over-voltage protection (option). All metal parts are interconnected and the cabinet includes earthing lugs for an earthing connection. You can add an optional overvoltage protection for areas with a high risk of lightning.

Local Bus Connection Board

The local bus connection board interconnects all the devices of a system as a part of an RS-485 protocol. Inside the equipment cabinets, the equipments are pre-connected at delivery. The interconnection of all equipment cabinets in a flashing system must be realized with a screened dual twisted pair connection.

The local bus connection board has a set of gas arresters that provide over-voltage protection for the local bus wiring.

3.5 Local Master Controller (LMC) Description

The LMC controls a complete flashing system and interfaces to remote controls. The LMC is the interface between the control system and the flashing system.

The LMC makes it possible to:

- Monitor and configure the whole flashing system from any cabinet in the system with a configuration software tool and PC, if you purchased this option.
- Measure and control the temperature of each cabinet.
- Receive a signal if the micro switch of the flasher unit or the cabinet door is open. In this case, the flasher capacitor is also discharged.
- Receive MOV signals.
- Regulate the flashing rate and intensity.
- Control the status of all the connected equipments.

An internal temperature probe is installed on the LMC connector.

Location

The LMC is a PCB installed in the cabinet door of any equipment cabinet in the flashing system. It is recommended to install the LMC in an equipment that you can easily access for maintenance.

Rotary Switch

The LMC has a rotary switch that makes it possible to switch between:

- Remote control;
- Local control.

For more information on the rotary switch, see § 7.3.

External Temperature Probe

One external temperature probe per flashing system must be installed onto any equipment cabinet in the system. The LMC reads the data from the external temperature probe and uses the data to control the anti-condensation heating resistors. The temperature probe reads the actual ambient temperature.

Start-up and Scanning

At start-up, the LMC reads its local memory to find the system configuration. Then, the LMC contacts all the FCU PCBs in the flashing system through the local bus. Then, the LMC sends system configuration data to each equipment to program them for normal operation.

After the start-up sequence, the LMC continues to scan all the FCUs sequentially to ensure correct operation. If the system has RTIL flashers, they are scanned at a higher rate because it is required to switch one OFF if the other fails (misfires).

Synchronization

Copyright ©2008—2026 ADB SAFEGATE, All Rights Reserved

The LMC synchronizes all equipments to make sure that they flash in a correct flashing rhythm.

To do this, the LMC sends a message to all equipments at regular intervals.

3.6 Options

Remote Control between Flashing System and Tower

Each equipment can be controlled remotely with Multiwire, J-Bus, or a combination of the above. See § 3.7.

Over-voltage Protection

The equipment can be supplied with an extra over-voltage protection. When an overvoltage is supplied to the individual equipment cabinets, the over-voltage protection activates. An alarm can be generated through the feedback of the LMC. When the origin of the problem is solved, it is necessary to replace the MOV cartridge.

Dongle

The dongle enables you to connect the equipment directly to a PC. A special configuration software tool makes it possible to monitor and control the complete flashing system that one LMC controls.

When the dongle is connected between the system and a PC, the PC takes over the control of the flashing system. In this case, the dongle collects all the necessary data from the LMC and the individual equipments. When the dongle is connected, it also provides the synchronization messages instead of the LMC.

3.7 Remote Control Description (option)

J-Bus

The J-Bus interface uses a single or dual databus(es) to allow remote monitoring of a bigger quantity of parameters.

- With a single databus, the equipment has only one communication channel.
- With a dual databus, the equipment has two communication channels: Bus A and Bus B.

  The communication channels must take different routes to avoid a communication failure if one cable is interrupted.

Multiwire PCB

A multiwire PCB has 2 times 12 terminals. The terminals handle the maximum 8 incoming and maximum 8 outgoing signals between the equipment and the remote control system.

There is only one multiwire PCB possible per LMC, so also one multiwire PCB per flashing system.

The multiwire interface provides control and back-indication signals for basic remote control functions between the equipment and a remote control system.

The terminals of the multiwire PBC handle the incoming and outgoing signals between the equipment and the remote control system.

Note

The factory settings apply a specific signal to one terminal. If you want to make changes, this is possible when you commission with the configuration software tool. It is necessary to configure a specific signal only to one terminal.

Control Signals

The control signals feed relay coils. An RC circuit protects the relay coils for transient over- voltage.

Table 2: Multiwire Options

Multiwire	48 VDC remote control	24 VDC remote control
Minimum voltage	40 VDC	21.6 VDC
Maximum voltage	65 VDC	35 VDC
Current consumption	Approximately 9 mA at 48 VDC	Approximately 16 mA at 24 VDC

The multiwire back-indication signals are provided over dry contact relays. The maximum contact load is:

- AC - 110 V -0.5 A - 60 VA
- DC - 110 V -0.5 A - 30 W

Copyright ©2008—2026 ADB SAFEGATE, All Rights Reserved

4.0 Commissioning

4.1 Main Commissioning Procedure

1. Remove the covers. See § 5.2.18.
2. Configure the FCU PCBs. See § 4.2.
3. Configure the flashing system. See § 4.3.
4. Configure the remote control interfaces. See § 4.4 and § 4.5.
5. Install the covers.
6. Test the equipment. See § Checks and Measurements.

4.2 Configure the FCU PCBs

4.2.1 Set the Communication Parameters

Set the dip-switches dip-switch bank SW1 of each FCU PCB. *This is the factory setting.*

Note

Do not change the setting as indicated in the illustration. First contact ADB if you want change this setting.

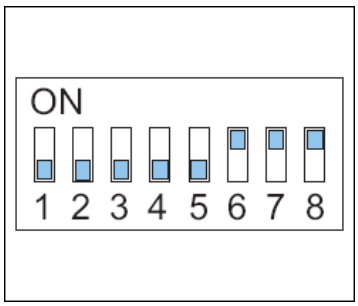

Copyright ©2008—2026 ADB SAFEGATE, All Rights Reserved

4.2.2 Define the Equipment Address

Each FCU PCB in the system must have its own, unique binary address.

Note

If RTILS (REILS) are present:

- Configure an unique address to both REILS or RTIL units;
- Make sure the REILS or RTILS have the highest binary and physical address.

Physical equipment order	Binary address	Physical equipment order	Binary address	Physical equipment order	Binary address
01	100000	09	100100	17	100010
02	010000	10	010100	18	010010
03	110000	11	110100	19	110010
04	001000	12	001100	20	001010
05	101000	13	101100	21	101010
06	011000	14	011100	22	111010
07	111000	15	111100		
08	000100	16	000010		

1. Set the first 6 dip-switches of the dip-switch bank SW2 of each FCU PCB. The illustration shows an example for the logical address 03: 110000.

Copyright ©2008—2026 ADB SAFEGATE, All Rights Reserved

2. Set the addresses in a logical order so that the first equipment is the one that is the furthest away from the runway.

Note

First contact ADB if you want to change this logical order.

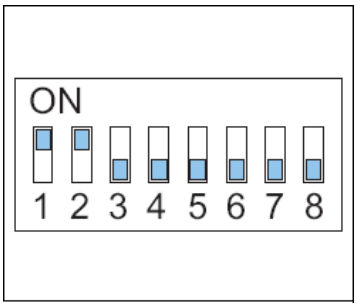

Example for a flashing system with both FCU-1 and FCU-3 units.

Note

The example shows a non-existing set of 10 flasher heads. A normal flashing system contains 2, 21, 23, 30 or 32 flasher heads. The example only shows the logical order to number.

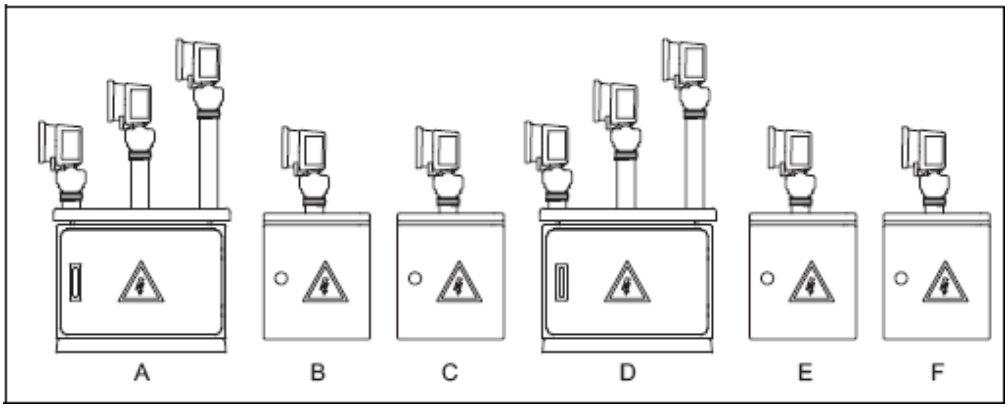

Equipment cabinet	Dip-switch SW2 set to:
A: furthest away from the runway	Equipment 01 = 100000 Equipment 02 = 010000 Equipment 03 = 110000
B	Equipment 04 = 001000
C	Equipment 05 = 101000
D	Equipment 06 = 011000 Equipment 07 = 111000 Equipment 08 = 000100
E	Equipment 09 = 100100
F	Equipment 10 = 010100

4.3 Configure the Flashing System

Copyright ©2008—2026 ADB SAFEGATE, All Rights Reserved

4.3.1 General Procedure

Set the dip-switch banks of the LMC:

- Manual configuration: see § 4.3.2.
- Configuration with the configuration software tool: see § 4.3.3.

Note

- It is not possible to configure the J-Bus remote control when you use manual configuration.
- It is not possible to configure the mulitwire functions per terminal when you use manual configuration.

4.3.2 Manual Configuration

General procedure

WARNING

Make sure that all power to the FCU cabinet is OFF before you set the dip- switches.

1. Enable local control;
2. Enable manual configuration;
3. Set the number of equipments in the system;
4. Set the sequence, timing and RTILs / REILs;
5. Restart the LMC. Use the fused input switch.
   Enable local control
6. Set the rotary switch of the LMC PCB to 0.
   Enable manual configuration
7. Set the dip-switch 4 of dip-switch bank SW4 of the LMC PCB to ON.

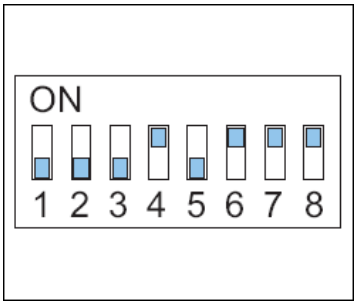

   Set number of equipments in system

8. Set the dip-switches 1 to 6 of dip-switch bank SW5 of the LMC PCB the same as dip-switch bank SW2 for the last flasher head in the flashing system. See § 4.2.2. *This is the number of flasher heads in the flashing system. Set flashing sequence, timing and RTILS or REILS*
9. Set the dip-switches of dip-switch bank SW2 of the LMC PCB.

Copyright ©2008—2026 ADB SAFEGATE, All Rights Reserved

10. Make sure that the total of the interval times multiplied by the number of flasher heads is smaller than the flashing sequence time.

Table 3: Dip-switch bank SW2 of the LMC PCB

Item	Setting	Set dip-switch to
Flashing sequence	2 flash cycles / s	Dip 4: 0
	1 flash cycle / s	Dip 4: 1
RTILS / REILS	Installed	Dip 3: 1
	Not installed	Dip 3: 0
Interval time between flasher heads	16 ms	Dip 1: 0 Dip 2: 0
	33 ms	Dip 1: 1 Dip 2: 0
	66 ms	Dip 1: 0 Dip 2: 1

Note

Flashing sequence: the use of 2 flash cycles / s depends on the number of flasher heads and the chosen interval time. Flashing rhythms lower than those specified by ICAO can make it impossible to get 2 flashes / s.

Restart LMC

11. Make sure that the all equipment cabinets in the system are switched ON.
12. Switch OFF the equipment that has the LMC. *Leave the power off for approximately 10 seconds.*
13. Switch ON the equipment that has the LMC. *Use the fused input switch.* Now the flashing system reads the dip-switches and adapts to changes you made since the last power cycle on the equipment that has the LMC.

4.3.3 Configuration with the Configuration Software Tool

General procedure

WARNING

Make sure that all power to the FCU cabinet is OFF before you set the dip- switches.

CAUTION

Make sure that the flashing system is not in use when you switch the control to the dongle/configuration sotware tool. When the control of the system transfers to the dongle, some problems may occur. This is due to the timing differences between the synchronization messages of the LMC and the dongle.

Note

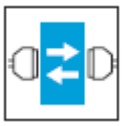

Use the configuration software tool. See chapter 8.

Copyright ©2008—2026 ADB SAFEGATE, All Rights Reserved

1. Enable local control.

> **Note**
> From the moment that the communication is established between the dongle and the equipment, you can not control the flashing system with local or remote control.

2. Enable software configuration.
3. Set the number of equipments in the system.
4. Restart the LMC.
5. Define the system layout with the configuration software tool.
6. Define the flashing mode with the configuration software tool.
   Enable software configuration
7. Set the dip-switch 4 of the dip-switch bank SW4 of the LMC PCB to OFF.

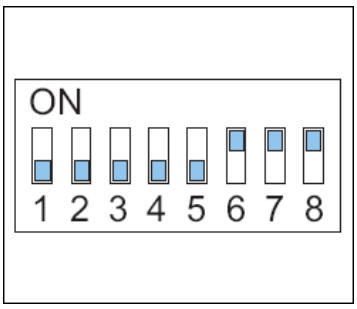

   Set number of flasher heads in system

8. Set the dip-switches of the dip-switch bank SW5 of the LMC PCB.
   - Dip-switches 1 to 6: set the same as for SW2 for the last flasher head in the flashing system. See § 4.2.2.
   - Dip-switch 8: ON. Dip-switch 8 allows the communication over the dongle to the LMC PCB.

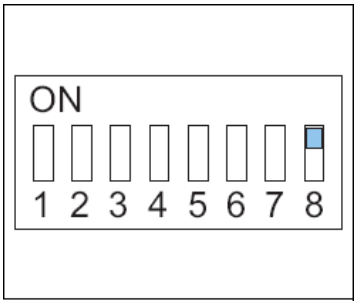

   Restart LMC

9. Make sure that the all equipment cabinets in the system are switched ON.
10. Switch OFF the unit that has the LMC. *Leave the power off for approximately 10 seconds.*

Copyright ©2008—2026 ADB SAFEGATE, All Rights Reserved

11. Switch ON the unit that has the LMC. *Use the fused input switch.* Now the flashing system activates the dip-switch settings

    Define flashing system layout

    Flashing system layout:

    - Number of flasher heads;
    - Number of equipment cabinets;
    - Flashing rhythm and order

    CAUTION

    Make sure that all flasher heads are connected to the equipments in a logical order. For example, the first flasher head is the one that is furthest away from the runway. If the system has RTILs or REILs, those must be closest to the runway and must have the highest logical address.

    Set the number of flasher heads and equipment cabinets

12. Connect the cables. See § 8.2.1.

13. Start the software. See § 8.2.2.

14. Go to the menu **Layout** .

15. Set the number of flasher heads. Include the RTILS or REILs, if applicable .

16. Set the number of equipment cabinets (boxes)

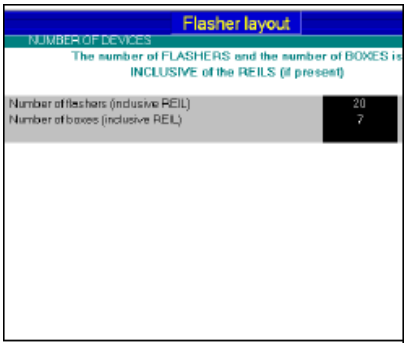

Set the flashing system layout

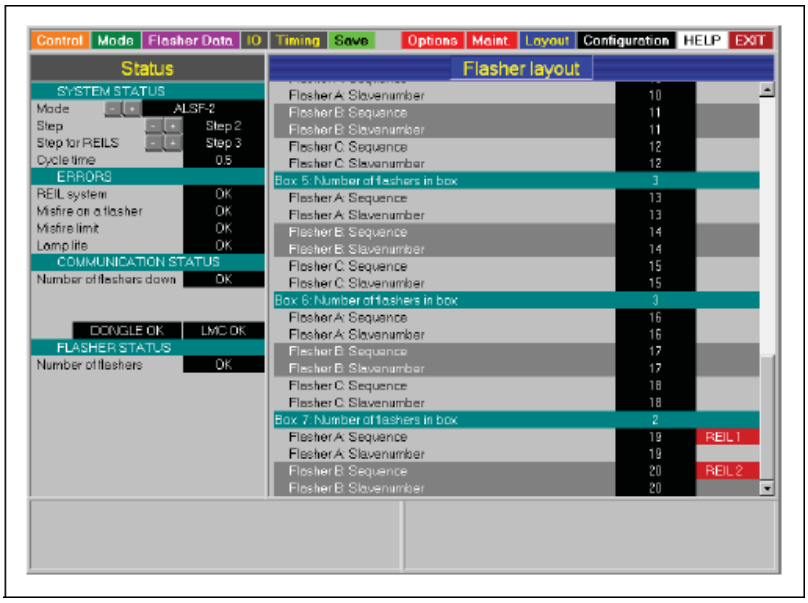

17. Set a flashing sequence and a slave number for each flasher head. *Preferably work in a logical order: set the sequence number equal to the slave number and set the the first flasher head in the flashing system to 1* .

Copyright ©2008—2026 ADB SAFEGATE, All Rights Reserved

18. Set some of the flasher heads to be REILs or RTILs, if applicable. *Click the field after th* e *sequence number.*

> **Note**
> All flasher heads for the REILS or RTILS flasher heads need an individual unique sequence number.

Upload the changes

19. Press **Program** . The software now sends the changes to the LMC.
20. Check the message windows that appears on the screen.
    - Layout OK" means that the new layout was sent successfully.
    - "Layout Not OK" means that you must check the layout and the dip-switch settings again.

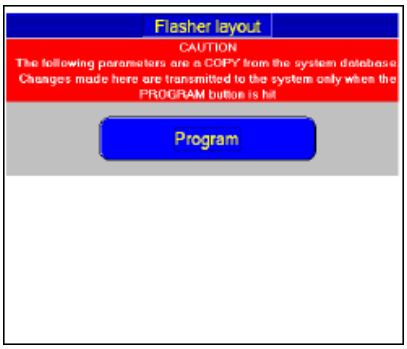

Check if the equipments are on-line

21. Go to section **Flasher data** .
22. Press **Status** .
23. Check if the status of the LMC and all flasher heads is **Online** .

Copyright ©2008—2026 ADB SAFEGATE, All Rights Reserved

24. If this is not the case, check the power supply to all equipment cabinets
    - The power supply to all equipment cabinets;
    - The position of the door switches;
    - The binary addresses on the FCU PCBs;
    - The local bus communication cables.

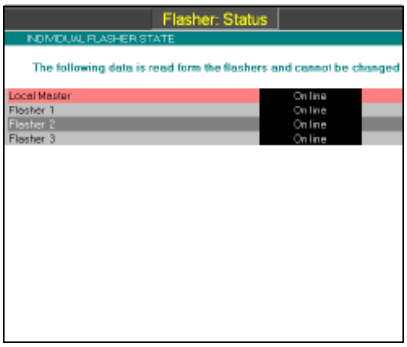

Define the flashing mode

Set the flashing mode

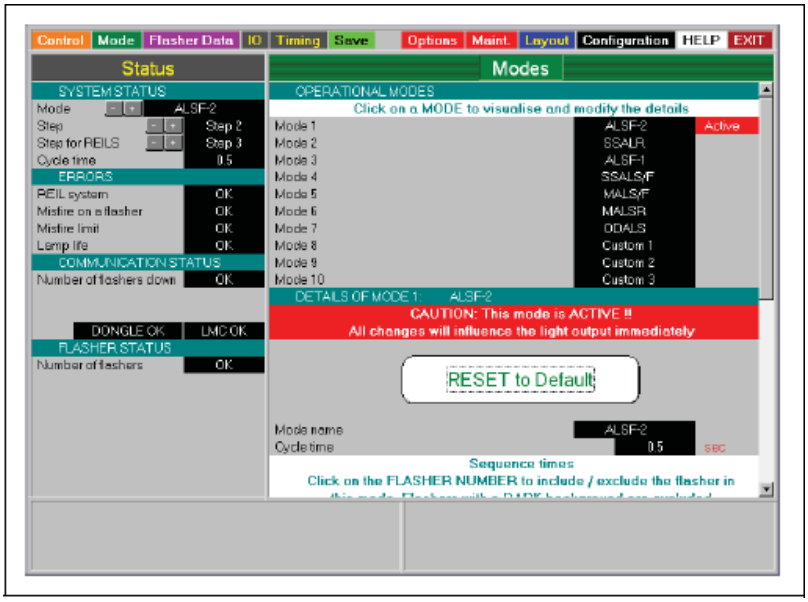

25. Open the configuration software tool.
26. Switch the equipment ON. *Use the fused input switch.*
27. Select the menu **Modes** .
28. In the System status window, press the '+' button until the required mode is active.

Copyright ©2008—2026 ADB SAFEGATE, All Rights Reserved

29. If necessary, modify the available modes. Click a mode field to show the details in the section **Details of mode** .

Note

- Normally you do not have to change the individual settings in different modes.
- For an RTIL or REIL: make sure that these sequence times are set to equal numbers to make sure they flash simultaneously.

These flashing modes are available:

- ASLF-1;
- ASLF-2;
- SSALR;
- SSALS;
- MALSR;
- MALSF;
- ODALS;
- Custom: any of the above modes can be changed (user defined).

Only if you need to change the standard setting of a mode:

30. Check and change if necessary the cycle time for each mode.
31. Define which flashers are included in the selected mode.
32. Check if the correct number of flashers is active. The box of an active flasher is black.
33. Check if the correct number of flashers is inactive. The box of an inactive flasher is grey.
34. To switch the flasher between active (black) and inactive (grey), click the flasher name.
35. Check the correct sequence time in ms.

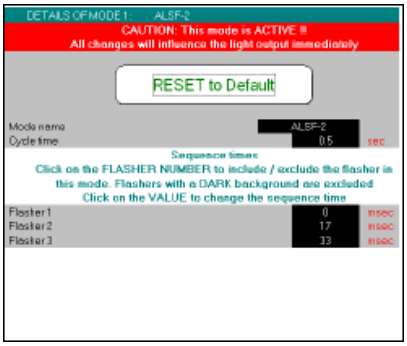

4.4 Remote Control Configuration: Multiwire (Option)

Note

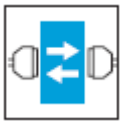

Use the configuration software tool. See chapter 8 .

Enable remote control

1. Make sure that the multiwire cable is correctly installed. See § 5.2.7.
2. Set the rotary switch SW3 (A) of the LMC A PCB to position 9. *Now the equipment cabinet is remote controlled.*

Copyright ©2008—2026 ADB SAFEGATE, All Rights Reserved

3. Test all remote control functions. For the factory settings, see § 9.5.

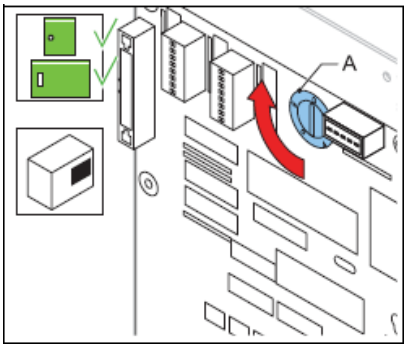

Change the input and output signals, if applicable

4. In the configuration software tool open menu **IO** .
5. Simulate an error.
6. Check if the remote control receives the signals.
7. To change the input and output signals of the multiwire boards, click the terminal fields. *A pop-up window appears.* See also § 9.4.4 and 9.4.5.
8. Carry out the error simulation again, if applicable.

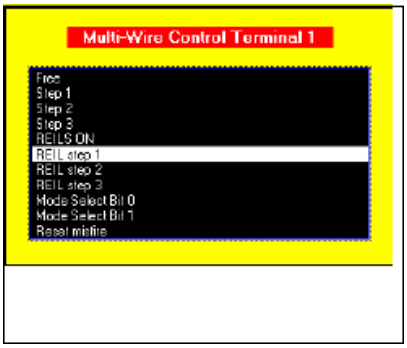

4.5 Remote Control Configuration: J-Bus (Option)

Note

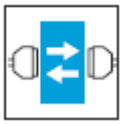

Use the configuration software tool. See chapter 8 .

4.5.1 General Procedure

1. Set the binary address of the LMC.
2. Set the slave address.
3. Set a two or four wire communication type.
4. Check the connection.

Copyright ©2008—2026 ADB SAFEGATE, All Rights Reserved

4.5.2 Set binary Address of LMC

Set the dip-switches of dip-switch bank SW1 according to the databus connection of the equipment cabinet. For details see § 9.3.

4.5.3 Set Slave Address

The slave on the data bus must have a unique binary address.

Change the settings of the dip-switches of dip-switch bank SW1 on the LMC PCB.

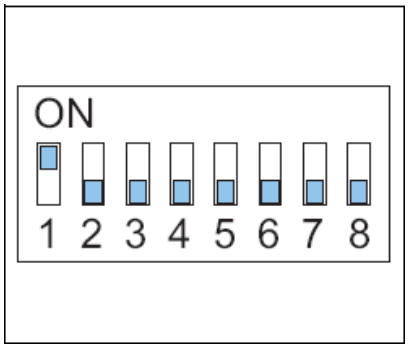

4.5.4 Set two/four Wire Communication

Set the straps on the LMC PCB. See § 9.3.

4.5.5 Check Connection

To check the connection, connect from a place where the remote control connection already works.

1. Remove the multiwire cable. See § 5.2.7.
2. Set the rotary switch SW3 (A) of the LMC PCB to position 9. *Now the equipment cabinet is remote controlled.*
3. Check all remote control functions.
4. Open the configuration software tool in menu **IO** .
5. Simulate an error.
6. Check if the remote control receives the signals.

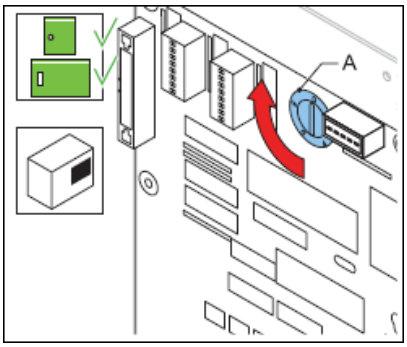

4.6 Commissioning Records

Copyright ©2008—2026 ADB SAFEGATE, All Rights Reserved

4.6.1 Use Tables

Use the tables to record all the necessary information in the commissioning phase.

4.6.2 Commissioning Record Tables

Table 4: Commissioning record tables - general

Approach	Mode name
	Cycle time in seconds

Table 5: Commissioning record tables - flasher head 1 to 11

Flasher head	1	2	3	4	5	6	7	8	9	10	11
Equipment cabinet											
SW2 address											
REIL/RTIL											
FCU-3 / FCU-1											
FCU-1 phase connect											
Termination resistance set											
P1/P3 to P1/P3 to											
Timing [ms]											
Group											

Table 6: Commissioning record tables - flasher head 12 to 22

Flasher head	12	13	15	15	16	17	18	19	20	21	22
Equipment cabinet											
SW2 address											
REIL/RTIL											
FCU-3 / FCU-1											
FCU-1 phase connect											
Termination resistance set											
P1/P3 to P1/P3 to											
Timing [ms]											
Group											

Copyright ©2008—2026 ADB SAFEGATE, All Rights Reserved

Table 7: Commissioning record tables - flasher head 23 to 32

Flasher head	23	24	25	26	27	28	29	30	31	32	
Equipment cabinet											
SW2 address											
REIL/RTIL											
FCU-3 / FCU-1											
FCU-1 phase connect											
Termination resistance set											
P1/P3 to P1/P3 to											
Timing [ms]											
Group											

4.6.3 J-bus Settings Table (Option)

Hardware present	Bus A		
	Bus B		
Arbiter	Arbiter		
Local kill	Local kill		
Default	Breakdown mode		
	Default mode		
	Default step		
	Default step REIL		
Bus	Slave number		
	Bus A	Time-out	
		Baud rate	
		Parity	
	Bus B	Time-out	
		Baud rate	
		Parity	

4.6.4 Multiwire Settings Table (Option)

Back-indication signals

Table 8: Customized back-indication signals

P1	Signal	Function
1	Output 1	
2	Output 2	

Copyright ©2008—2026 ADB SAFEGATE, All Rights Reserved

Table 8: Customized back-indication signals

P1	Signal	Function
3	Output 3	
4	Output 4	
5	Output 5	
6	Output 6	
7	Output 7	
8	Output 8	
9	Common	
10	GNDext	
11	Vext+	
12	PE	

Remote control signals

Table 9: Customized remote control signals

P1	Signal	Function
1	Input 1	
2	Input 2	
3	Input 3	
4	Input 4	
5	Input 5	
6	Input 6	
7	Input 7	
8	Input 8	
9	Common	
10	GNDext	
11	Vext+	
12	PE	

Copyright ©2008—2026 ADB SAFEGATE, All Rights Reserved

Copyright ©2008—2026 ADB SAFEGATE, All Rights Reserved

5.0 Maintenance

5.1 Preventive Maintenance Schedule

Table 10: Preventive maintenance schedule

Frequency	Check	Action
In accordance with ICAO Aerodrome Design Manual Part 9 Airport Maintenance practices or in accordance with local maintenance regulations.	Check all the equipment cabinets for damage.	Replace all damaged parts. See § 5.2.
	Check all the equipment cabinets for vermin or dirt.	Clean all contaminated parts.
		Vacuum clean all the equipment cabinets.
	Check if all the equipment cabinets are properly sealed.	▪ Remove the broken seal. ▪ Apply a new seal.

5.2 Part Replacement

WARNING

Make sure you have read and understood all safety procedures and standards related to this equipment. See Safety.

WARNING

Make sure you switch OFF the power supply. See § 5.2.2.

CAUTION

While you carry out maintenance, make sure that:

- You do not drop any screws or nuts inside the equipment cabinet. Collect all loose nuts and screws immediately.
- You can identify all cables you disconnect. Label the cables.
- You have saved the equipment settings as a profile. To do this in the configuration software tool, see § 8.4.7.
- You install the new parts exactly the same way as the part you removed the parts.

Note

After every part replacement, examine the flashing system for correct operation.

Copyright ©2008—2026 ADB SAFEGATE, All Rights Reserved

The procedure show how to replace these parts:

- FCU-3 PCB at the left and the right of the equipment cabinet. See § 5.2.3.
- FCU-1 PCB and FCU-3 PCB in the middle of the equipment cabinet. See § 5.2.4.
- LMC PCB. See § 5.2.5.
- Multiwire PCB. See § 5.2.6.
- Multiwire cable. See § 5.2.7.
- J-Bus PCB. See § 5.2.8.
- Capacitor. See § 5.2.9.
- DC power supply. See § 5.2.10.
- Door micro-switch. See § 5.2.11.
- Local bus connection board. See § 5.2.12.
- Wiring assembly. See § 5.2.13.
- Cable entry kit with bottom. See § 5.2.14.
- Choke. See § 5.2.15.
- Mains filter. See § 5.2.16.
- Overvoltage protection (MOV). See § 5.2.17.
- Covers. See § 5.2.18.

5.2.1 Required Tools

- Multimeter.
- Standard electrical and mechanical tool kit;·
- Screwdrivers with protection up to 1000 V;
- Long screwdriver;
- Spanner set (ring or socket spanners);·
- Allen key 8 mm;
- Magnet rod for collecting loose items;
- Angle socket wrench;
- Door key for the equipment cabinet.

5.2.2 Prepare: Switch OFF Power Supply

1. Switch OFF the main power supply at the substation.
2. Open the cabinet door.
3. Switch OFF the fused input switches (A).
    - FCU-1: fuse holders F1 and F2;
    - FCU-3: fuse holders F1, F2 and F3;

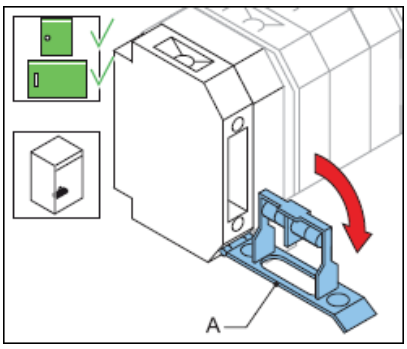

Copyright ©2008—2026 ADB SAFEGATE, All Rights Reserved

5.2.3 FCU-3 PCB at left or right of Equipment Cabinet

The procedure applies to the left and right PCBs of the FCU-3 cabinet. To replace the middle FCU board, see § 5.2.4.

Remove base plate

1. Make sure that all power to the equipment is OFF. See § 5.2.2.
2. Remove the cover. See § 5.2.18.
3. Disconnect all the connectors on the PCB. *Use pliers for the connectors in TB3, if necessary.*
4. Loosen the fasteners (A). *Use an angle socket wrench for the nuts.*
5. Remove the base plate (B).
6. Disconnect the cables from the two cable retainers (C).

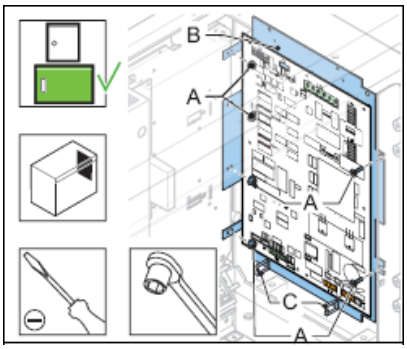

Remove PCB from base plate

7. Loosen the nine nuts (A).
8. Loosen the two screws (B).
9. Remove the PCB. *Use a lever below the board, if necessary.*

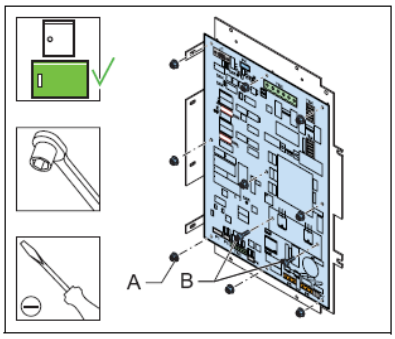

Install - 1

10. Clean the base plate.
11. Apply an equal layer of conductive paste on the cooling plate of the new PCB.
12. Replace the FCU PCB (B).
13. Set the dip-switches and straps the same as the settings as those on the removed FCU PCB .
14. Tighten the two screws (B).

Copyright ©2008—2026 ADB SAFEGATE, All Rights Reserved

15. Tighten the nine nuts (A).

CAUTION

Tighten the screws (B) before you tighten the nuts (A) to ensure the correct coupling of the cooling plate of the board with the base plate.

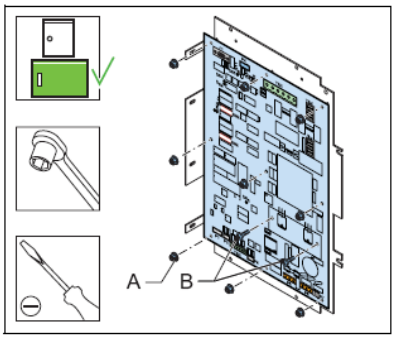

Install - 2

16. Install the fasteners (A) and install the base plate (B). Use an angle socket wrench for *the nuts.*

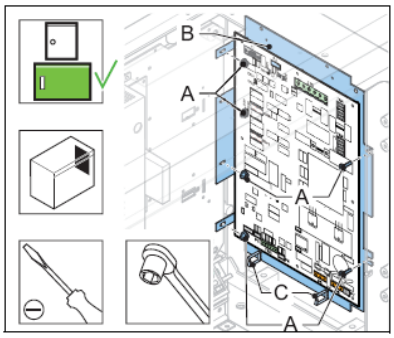

Install - 3

17. Connect the cables to the connectors:
    - Power supply to the DC unit to P7 (left-hand FCU PCB only);
    - Power supply to P6 (If necessary to identify the connector, measure for 230 V);
    - MOV connection to P3;
    - Power distribution from the DC unit to TB1;
    - Door switch to P2;
    - Capacitor terminal connection to TB3 (red wire to +400 and blue/white wire to PE);
    - Coil connection to TB4 (RET and TRIG). *The polarity is not important* ;
    - Flasher head connection to TB2;
    - Local bus to P4;
18. Install the cover.
19. Close the cabinet door.

Copyright ©2008—2026 ADB SAFEGATE, All Rights Reserved

20. Check if the FCU PCB works correctly. See Checks and Measurements.

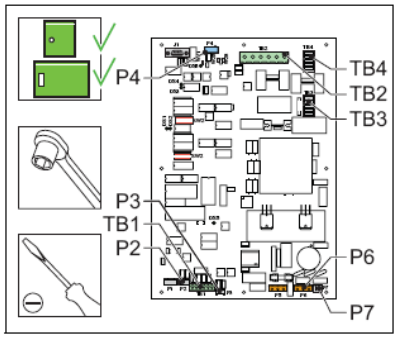

5.2.4 FCU-1 PCB or FCU-3 middle PCB

The procedure applies to the PCB of the FCU-1 and the middle PCB of the FCU-3.

Remove

1. Make sure that all power to the equipment is OFF. See § 5.2.2.
2. Remove the cover. See § 5.2.18.
3. Disconnect all the connectors on the PCB. *Use pliers for the connectors in TB3 , if necessary* .
4. Loosen the nine nuts (A).
5. Loosen the two screws (B).
6. Remove the PCB. *Use a lever under the board, if necessary* .

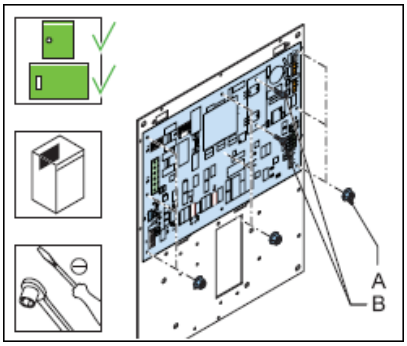

Install - 1

7. Clean the base plate.
8. Apply an equal layer of conductive paste on the cooling plate of the new PCB.
9. Replace the FCU PCB (B).
10. Set the dip-switches and straps to the same settings as the old FCU PCB .
11. Tighten the two screws (B).

Copyright ©2008—2026 ADB SAFEGATE, All Rights Reserved

12. Tighten the nine nuts (A).

CAUTION

Tighten the screws (B) before you tighten the nuts (A) to ensure the correct coupling of the cooling plate of the board with the base plate.

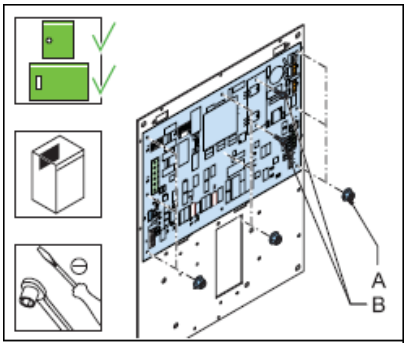

Install - 2

13. Connect the cables to the connectors:
    - Power supply to P6 (If necessary to identify the connector, measure for 230 V);
    - AC input supply to the AC/DC supply connector on P7. *Only for FCU-1.*
    - Heater connection to P5;
    - MOV connection to P3;
    - Power distribution from the DC unit to TB1;
    - Door switch to P2;
    - Capacitor terminal connection to TB3 (red wire to +400 and blue/white wire to PE);
    - Coil connection to TB4 (RET and TRIG);
    - Flasher head connection to TB2;
    - Local bus to P4.
14. Install the cover.
15. Close the cabinet door.
16. Check if the FCU PCB works correctly. See chapter 7.

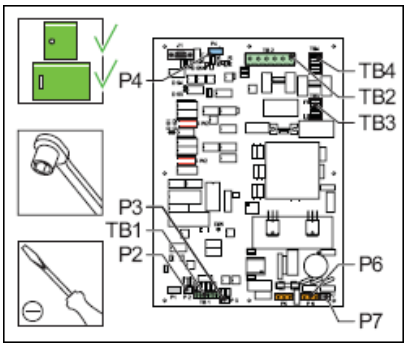

5.2.5 LMC PCB

Save IO profile

Note

Only save the IO profile if you configured the flashing system with the configuration software tool.

Copyright ©2008—2026 ADB SAFEGATE, All Rights Reserved

1. Switch ON the equipment.
2. Open the configuration software tool.
3. Go to menu **SAVE** .
4. Select **Save** . The used IO profile is now saved on your PC.
5. Switch OFF all power to the equipment. See § 5.2.2.

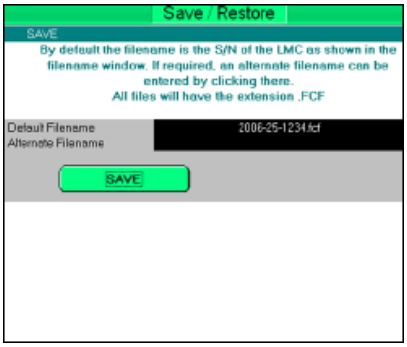

Replace

6. Disconnect the cables to the LMC PCB.
7. Remove the eight nuts (A).
8. Replace the LMC PCB (B).
9. Set the dip-switches and straps to the same settings as the old LMC PCB .
10. Install the eight nuts (A)

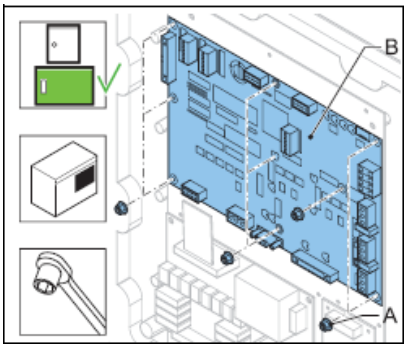

Connect cables

11. Connect the cables to the connectors:
    - Power distribution from the DC unit to TB1;
    - MOV connection to P6;
    - Door switch to P7;
    - External temperature probe to P8;
    - Multiwire connection to P5 (optional);
    - Local bus to P2;
    - J-Bus connection to P1 (optional).
12. When you configured the flashing system with the configuration software tool, reload the settings.

Copyright ©2008—2026 ADB SAFEGATE, All Rights Reserved

13. Close the cabinet door.

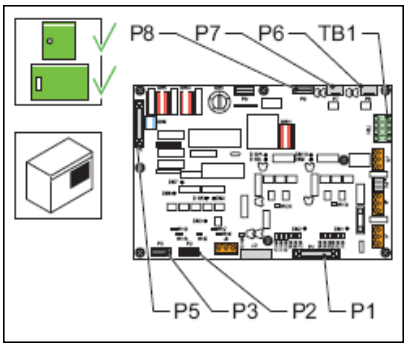

Restore IO profile

14. Switch ON the equipment.
15. Open the configuration software tool.
16. Go to menu **SAVE** .
17. Restore the IO profile.
    Select **Restore** and browse to the saved profile on your PC.
18. Switch OFF all power to the equipment. See § 5.2.2.

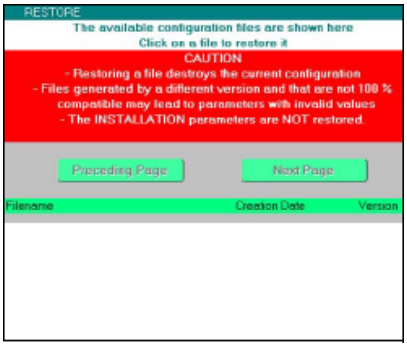

Configure

19. Configure the flashing system. See § 4.3.

5.2.6 Multiwire PCB

The procedure applies to both 24 V DC and 48 V DC type of multiwire PCBs.

Replace

1. Make sure that all power to the equipment is OFF. See § 5.2.2.
2. Disconnect the cables from the multiwire PCB (B).
3. Remove the nuts (A). *Use a number 5.5 socket wrench.*
4. Replace the multiwire PCB (B).
5. Set the straps to the same settings as the old multiwire PCB .

Copyright ©2008—2026 ADB SAFEGATE, All Rights Reserved

6. Install the nuts (A). *Use a number 5.5 socket wrench.*

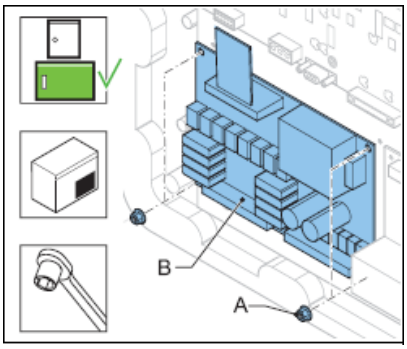

Connect

7. Connect the cables to the connectors:
   - Power supply to J1;
   - LMC to P3;
   - Input and output signal connectors to P1 and P2.
8. Check the remote control functions.
9. Configure the flashing system. See § 4.3.
10. Close the cabinet door.

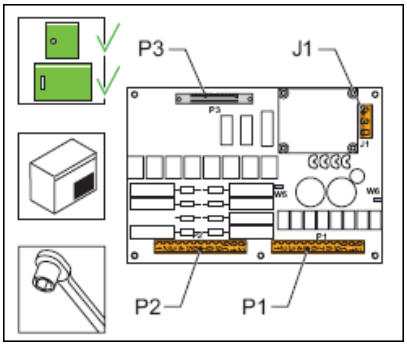

5.2.7 Multiwire Cable

1. Make sure that all power to the equipment is OFF. See § 5.2.2.
2. Disconnect the flat multiwire cable (A) from the connector P5 of the LMV PCB and P3 of the multiwire PCB.
3. Install the new multiwire cable (A).
4. Connect the multiwire cable (A) to the connector P5 of the LMC PCB and P3 of the multiwire PCB.
5. Close the cabinet door.
6. Check the remote control functions.

Copyright ©2008—2026 ADB SAFEGATE, All Rights Reserved

7. Close the cabinet door.

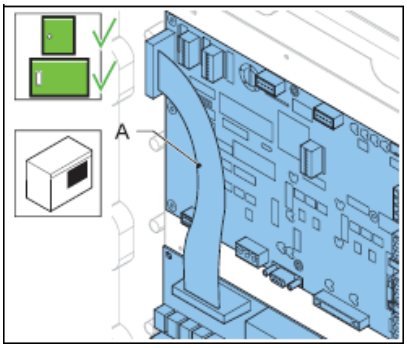

5.2.8 J-Bus PCB

CAUTION

When one unit on the databus chain is disconnected, the other units on that databus are also disconnected.

Replace

1. Make sure that all power to the equipment is OFF. See § 5.2.2.
2. Disconnect the cables and the ground wire from the J-Bus PCB (B).
3. Remove the four screws (A). *Use a number 5.5 socket wrench.*
4. Replace the J-Bus PCB (B).
5. Install the four screws (A). *Use a number 5.5 socket wrench.*

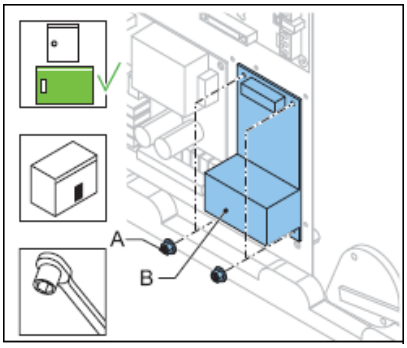

Connect

6. Connect the cables to the connectors:
   - LMC to P6;
   - J-Bus control for Bus A to P1 and P2;
   - J-Bus control for Bus B to P3 and P4;
   - Earth wire to the ground terminal.
7. Close the cabinet door.
8. Check the remote control functions.
9. Configure the flashing system. See § 4.3.

Copyright ©2008—2026 ADB SAFEGATE, All Rights Reserved

10. Close the cabinet door.

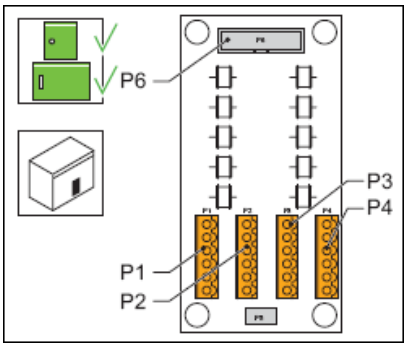

5.2.9 Capacitor

Prepare

1. Make sure that all power to the equipment is OFF. See § 5.2.2.
2. Wait minimum 1 min. after all power to the equipment is OFF.
3. Remove the cover. See § 5.2.18.

   Replace

WARNING

Make sure that you connect the wires correctly to the capacitor terminals. Always connect the red wire to the positive. An incorrect polarity may cause a risk of serious injury and may damage the equipment.

4. Connect an earth wire between the two terminals (A) for a few seconds. *The capacitor discharges.*
5. Remove the bolt (B). *Use a size 19 wrench.*
6. Remove the capacitor (C).
7. Disconnect the wires from the terminals (A).
8. Connect the wires to the terminals (A) of the new capacitor. *Connect the red wire to positive.*
9. Install the new capacitor (C).
10. Install the bolt (B). *Use a size 19 wrench.*
11. Install the cover.
12. Close the cabinet door.

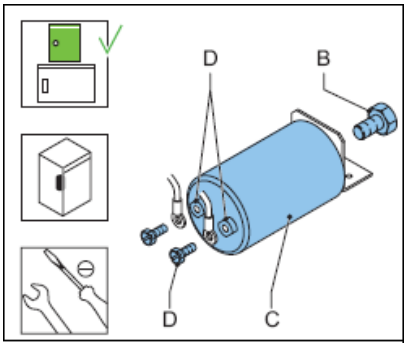

Copyright ©2008—2026 ADB SAFEGATE, All Rights Reserved

5.2.10 DC Power Supply

Prepare

The DC power supply module receives its input power from the FCU PCB through the connector P7. In an FCU-3 cabinet, one FCU PCB provides power to the DC power supply.

1. Make sure that the FCU PCB and the fuses F1, F2 and F3 work correctly.

   DC power supply module

   Remove

2. Make sure that all power to the equipment is OFF. See § 5.2.2.
3. Remove the two screws (B). *Use a long screwdriver.*
4. Remove the DC power supply module (A).
5. Disconnect:
   - the input connectors;
   - the distribution connectors;
   - the earth connection.
6. Make sure that the voltage on the AC distribution connector (C) of the new module is 230 V.

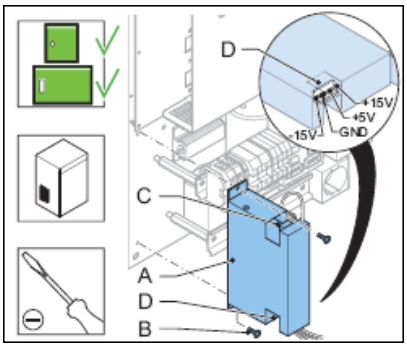

   Install

7. Connect the input wires PH and N to the input connector of the new module.
8. Connect the wires to the DC distribution connector (D):
   - Brown: +15 V;
   - Red: +5 V;
   - Black: GND;
   - White -15 V.
9. Connect the earth connection.
10. Install the new DC power supply module (A).
11. Install the two screws (B). *Use a long screwdriver.*

Copyright ©2008—2026 ADB SAFEGATE, All Rights Reserved

12. Close the cabinet door.

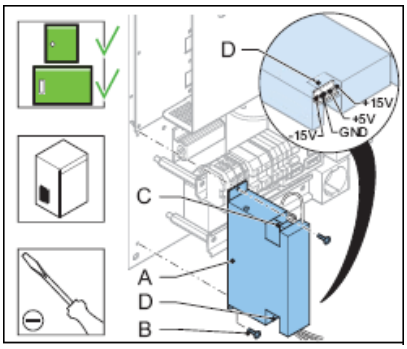

DC power supply, fuse

13. Make sure that all power to the equipment is OFF. See § 5.2.2.
14. Remove the DC power supply module. See the procedure above.
15. Remove the two screws (A).
16. Remove the cover (B).
17. Remove the fuse (C). *The fuse has a clip-on connection.*
18. Install the a new fuse (C). Make sure that the type is applicable for the module.
19. Install the cover (B).
20. Install the two screws (A).
21. Close the cabinet door.

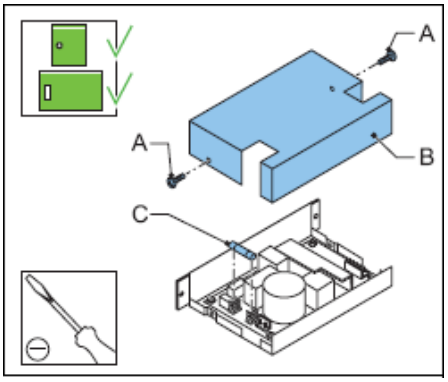

5.2.11 Door Micro-switch

1. Make sure that all power to the equipment is OFF. See § 5.2.2.
2. Remove the two screws (A).
3. Remove the door micro switch (B) from the mounting plate (D).
4. Disconnect the two wires (C).
5. Install the new door micro switch (B).
6. Adjust the position of the micro switch and make sure it operates correctly when you open and close the cabinet door.
7. Connect the two wires (C) to the two middle connectors of the door-switch (B).
8. Install the two screws (A).

Copyright ©2008—2026 ADB SAFEGATE, All Rights Reserved

9. Close the cabinet door.

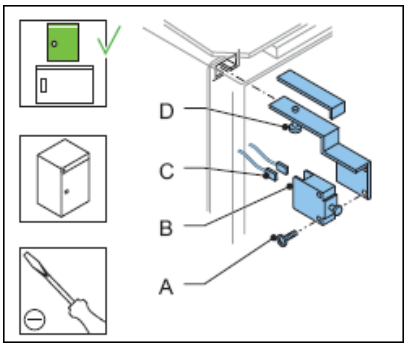

5.2.12 Local Bus Connection Board

Remove

1. Make sure that all power to the equipment is OFF. See § 5.2.2.
2. Record how the local bus cables are connected to the connectors.
3. Disconnect the connectors on the local bus connection board (A).
4. Disconnect the earth wire. *The earth wire has a clip-on connection.*
5. Remove the connection board (A) from the rail.

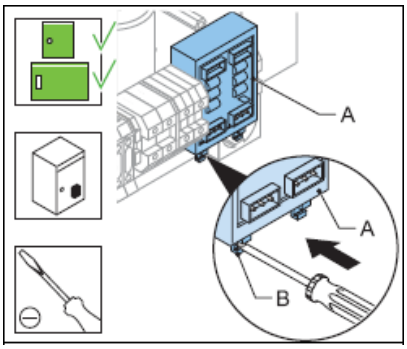

Use a lever to unlock the clip-holders (B).

Install

6. Install the new connector board. *Push the connector board on the rail* .
7. Connect the earth wire. *The earth wire has a clip-on connection* .
8. Connect the connectors on the local bus connection board (A). *Connect the cables in the same way as in the old connection board* .
9. Close the cabinet door.

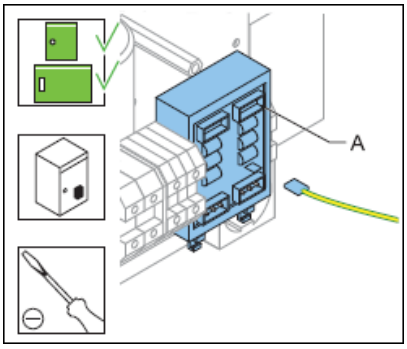

Copyright ©2008—2026 ADB SAFEGATE, All Rights Reserved

5.2.13 Wiring Assembly

FCU-1

Disconnect - 1

1. Make sure that all power to the equipment is OFF. See § 5.2.2.
2. Remove the cover. See § 5.2.18.
3. Disconnect the cables:
   - Power input terminals and protective earth terminals (A);
   - FCU PCB (connectors P7, P6 and P5) (B);
   - DC power supply (input wires) (C);
   - Multiwire PCB (J1) (D).
4. Remove the cable binders from the disconnected cables.

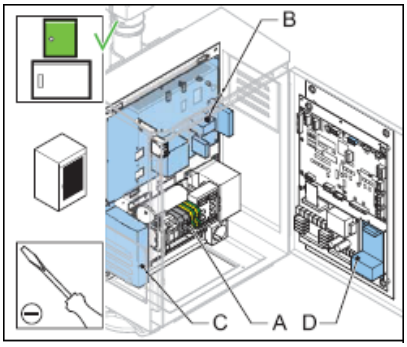

Disconnect - 2

5. Remove the Local bus connection board (A). See § 5.2.12.
6. Remove the terminal stopper (B).
7. Remove the two screws (D) .
8. Remove the rail (C).
9. Disconnect the cables:
   - Fuses F1 and F2 (7 cables) (E);
   - Heater (cut the two soldered connections) (F);

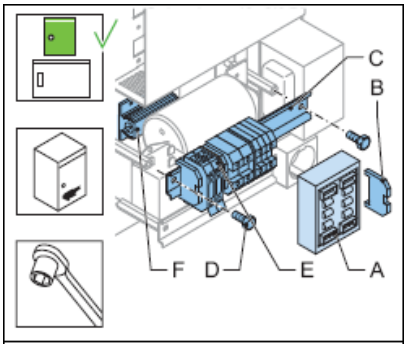

Replace

10. Remove the wiring assembly.

Copyright ©2008—2026 ADB SAFEGATE, All Rights Reserved

11. Install the new wiring assembly. Maintenance

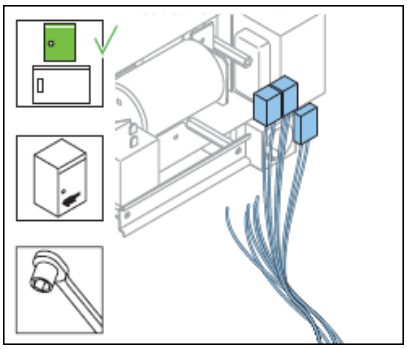

Connect - 1

12. Connect the seven cables of the fuses F1 and F2.

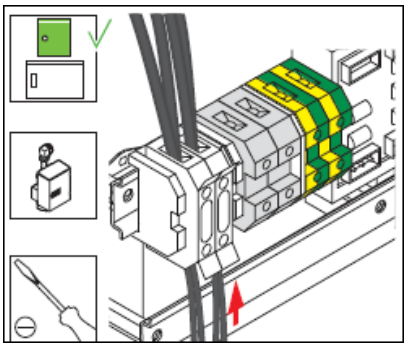

Connect heater cables

13. Slide thermo-retractable insulation sleeves on the cables;
14. Solder one cable on the connection point (A) on both sides of the heater;
15. Slide the insulation sleeve over the solder points.

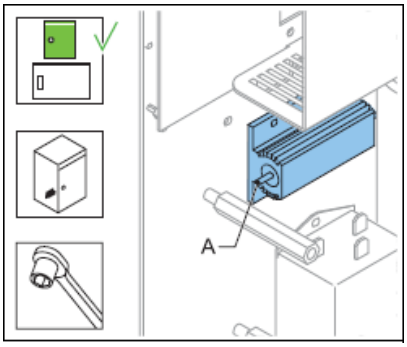

Connect - 3

16. Install the rail.
17. Install the two screws.
18. Install the Local bus connection board (A). See § 5.2.12.
19. Install the terminal stopper (B).

Copyright ©2008—2026 ADB SAFEGATE, All Rights Reserved

20. Connect the cables:
    - Power input terminals and protective earth terminals (C);
    - FCU PCB (connectors P7, P6 and P5) (D);
    - DC power supply (input wires) (E);
    - Multiwire PCB (J1) (F).
21. Bind the cables. *Use cable binders.*
22. Close the cabinet door.

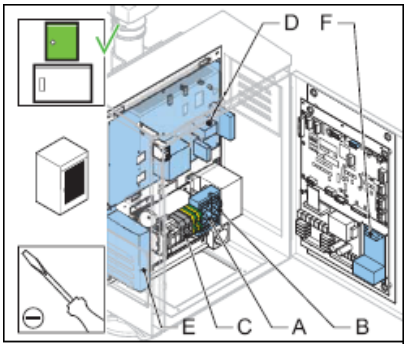

FCU-3

Disconnect - 1

23. Make sure that all power to the equipment is OFF. See § 5.2.2
24. Disconnect the cables:
    - Power input terminals L1, L2 and L3 and protective earth terminals (A);
    - FCU 1 PCB (connectors P7, P6 and P5) (B);
    - FCU 2 PCB (connectors P6 and P5) (C);
    - FCU 3 PCB (connector P5) (D);
    - DC power supply (input wires) (E);
    - Local bus connection board (F);
    - Multiwire PCB (J1) (G).
25. Remove the cable binders from the disconnected cables.

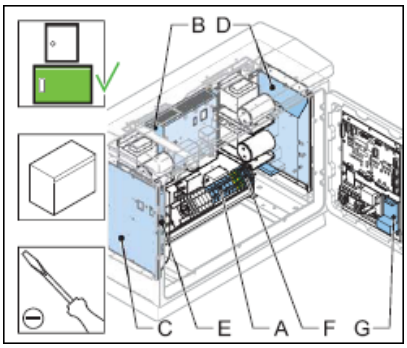

Disconnect - 2

26. Remove the two screws (A).
27. Remove the rail (B).

Copyright ©2008—2026 ADB SAFEGATE, All Rights Reserved

28. Disconnect the cables:
    - Fuses F1, F2 and F3;
    - Over-voltage protection MOV, if applicable;
    - Socket, if applicable;
    - Three mains filters;
    - Heater (cut the two soldered connections).

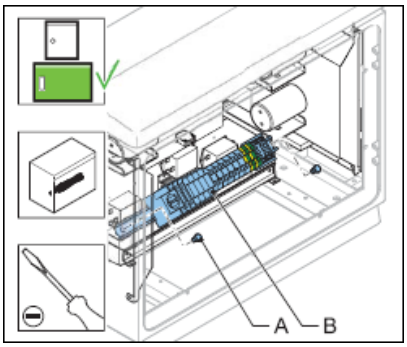

Replace

29. Remove the wiring assembly.
30. Install the new wiring assembly.

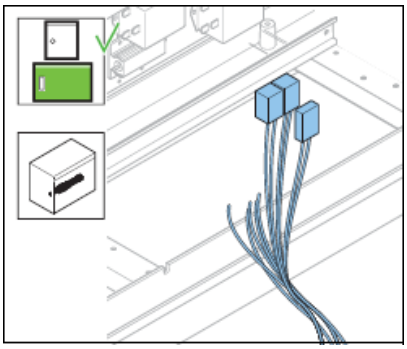

Connect - 1

31. Connect the cables:
    - Fuses F1, F2 and F3 (A);
    - Over-voltage protection MOV (if present) (B);
    - Socket (if present) (C);
    - Three mains filters (D).

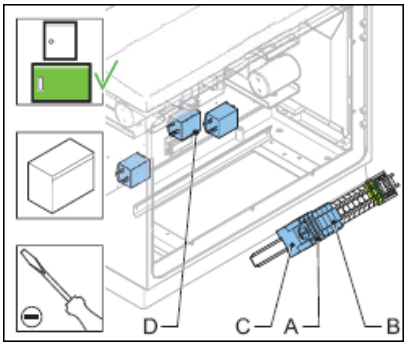

Connect heater cables

32. Slide thermo-retractable insulation sleeves on the cables;

Copyright ©2008—2026 ADB SAFEGATE, All Rights Reserved

33. Solder one cable on the connection point (A) on both sides of the heater;
34. Slide the insulation sleeve over the solder points.

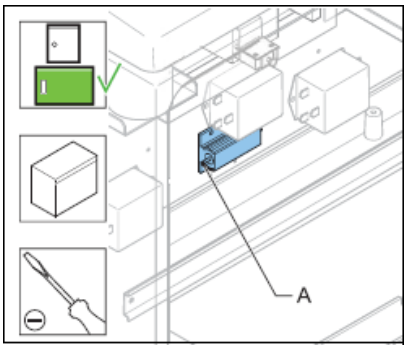

Connect - 3

35. Install the rail (A).
36. Install the two screws (B) .
37. Connect the cables:
    - Power input terminals L1, L2 and L3 and protective earth terminals (A);
    - FCU 1 PCB (connectors P7, P6 and P5) (B);
    - FCU 2 PCB (connectors P6 and P5) (C);
    - FCU 3 PCB (connector P5) (D);
    - DC power supply (input wires) (E);
    - Local bus connection board (F);
    - Multiwire PCB (J1) (G).
38. Bind the cables. *Use cable binders.*
39. Install the cover.
40. Close the cabinet door.

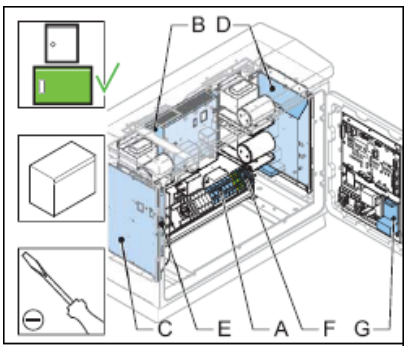

5.2.14 Cable Entry Kit with Bottom

1. Make sure that all power to the equipment is OFF. See § 5.2.2.
2. Disconnect:
    - the flasher head cable;
    - the power input cables;
    - the local bus cables;
    - the optional LMC cables;
    - the optional remote control cables

Copyright ©2008—2026 ADB SAFEGATE, All Rights Reserved

3. Remove the four slotted screws (A).
4. Remove the bottom plate (B).
5. Install the new bottom plate (C).
6. Cut the glands of the bottom plate into an applicable size.
7. Put the cables through the glands (D).
8. Connect the cables.
9. Close the cabinet door.

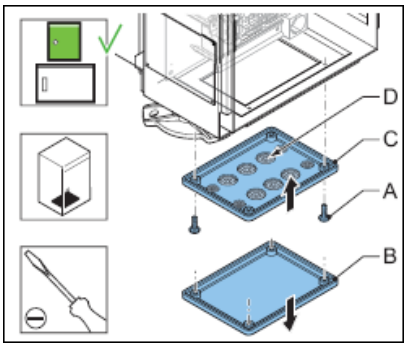

5.2.15 Choke

The FCU-3 has three chokes. The FCU-1one choke.

1. Make sure that all power to the equipment is OFF. See § 5.2.2.
2. Remove the cover. See § 5.2.18.
3. Remove the four screws (A).
4. Disconnect the cables from the FCU PCB connector TB4.
5. Remove the choke (B).
6. Install the new choke (B).
7. Connect the cables to connector TB4 of the the FCU PCB.
8. Install the four screws (A).
9. Install the cover.
10. Close the cabinet door.

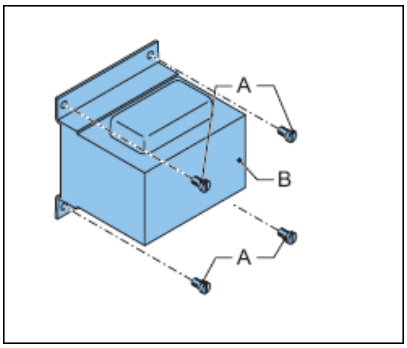

5.2.16 Mains Filter

The FCU-3 has three mains filters. The FCU-1 has one mains filter.

1. Make sure that all power to the equipment is OFF. See § 5.2.2.

Copyright ©2008—2026 ADB SAFEGATE, All Rights Reserved

2. Open the cabinet door.
3. Disconnect the three input connectors (PE, N and P) and the two output connectors (N and P).
4. Remove the two screws (A).
5. Remove the mains filter (B).
6. Install the new mains filter (B).
7. Install the two screws (A).
8. Connect the three input connectors (PE, N and P) and the two output connectors (N and P).
9. Close the cabinet door.

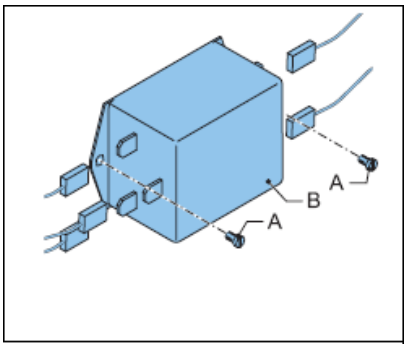

5.2.17 Overvoltage Protection Cartridge (MOV)

1. Make sure that all power to the equipment is OFF.
2. Take out the over-voltage protection cartridge module (A).
3. Push back the new over-voltage protection cartridge (A).
4. Close the cabinet door.

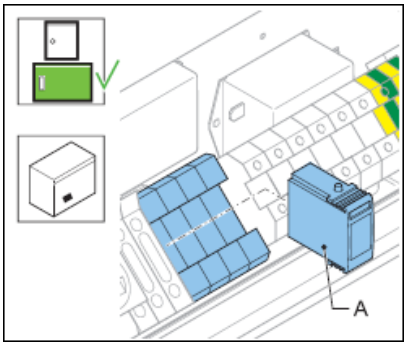

5.2.18 Remove Covers

Side covers

1. Loosen the screws (A). *Turn the screw a quarter of a turn*.

Copyright ©2008—2026 ADB SAFEGATE, All Rights Reserved

2. Remove the cover (B).

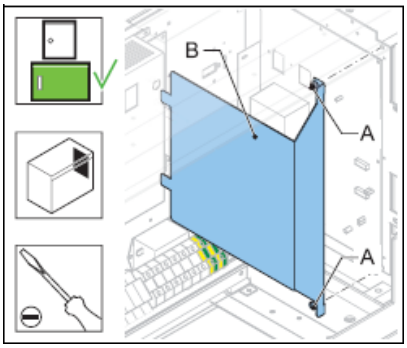

Middle cover

3. Loosen the screws (A). *Turn the screws a quarter of a turn*.
4. Remove the cover (B).

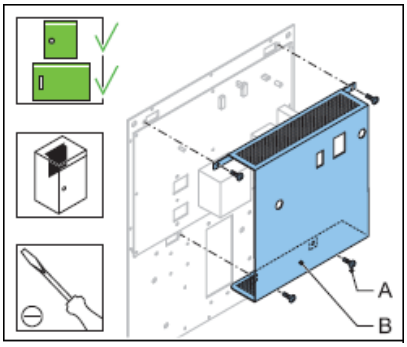

Copyright ©2008—2026 ADB SAFEGATE, All Rights Reserved

6.0 Troubleshooting

WARNING

Do not troubleshoot unless you have read and understood all the information in chapter 2 and you are qualified to work on high-voltage systems.

- Set the equipment to local control.
- Switch OFF the main switch of the equipment.

6.1 Preliminary Checks

Before you do any adjustments on the equipment, check if:

- all equipments communicate with the LMC;
- the power supply to the equipment is within the acceptance limits;
- the fused switches are operational;
- all connectors are correctly in place;
- no components show burned marks;
- wires are not interrupted or damaged;
- a cabinet door is open and the door switch is pulled out;
- a brightness step is requested on the LMC. Carry out the applicable action of the list below:
  - Carry out a remote control command to the flashing system (remote control);
  - Set the rotary switch of the LMC PCB to position 1, 2, or 3;
  - Control the flashing system with the configuration program and dongle.Troubleshooting

6.2 Troubleshooting Guide

Table 11: Troubleshooting guide

Problem	Possible cause	Possible solution(s)
System does not flash	At the equipment with the LMC: the power supply is not within tolerances.	Adjust the input supply voltage.
		▪ Disconnect all internal connections. ▪ Reconnect all internal connections one by one to find the cause of the problem.
	At the equipment with the LMC: the fuses are not present or not intact.	Replace the fuses.
	The LMC is not operational.	Examine the power supply to the LMC.
		Replace the LMC. See § 5.2.5.
	At the equipment with the LMC: the J-Bus (if present) communication does not run.	Examine the cables from and to the remote control system.
		Examine the activity of the J-Bus communication on the LEDs of the LMC PCB.
		Examine the configuration of the LMC with the configuration software tool.
		Examine if the remote control system interface is operational.
	At the equipment with the LMC: the local bus communication does not run.	Examine the activity of the local bus communication on the LEDs (Rx local bus and Tx local bus) of the FCU PCB in the equipment cabinet with the LMC.

Copyright ©2008—2026 ADB SAFEGATE, All Rights Reserved

Table 11: Troubleshooting guide

Problem	Possible cause	Possible solution(s)
		Examine the activity of the local bus communication on the LEDs (Rx local bus and Tx local bus) of the FCU PCB in the other equipment cabinets.
		Examine the external cables between the equipment cabinets.
	At the equipment with the LMC: the flashing request is not executed.	Examine if the door micro-switches of the equipment and the flasher head work and are in the correct position.
		Examine if local or remote control is active.
		Examine if 230 V AC is present on P6 of the FCU PCB.
		Examine if the FCU PCB fuse is intact.
		Examine if the activity of the LEDs DS1 to DS6 of the FCU PCB is correct.
		Examine if 400 V DC is present in the capacitor terminals.
		Replace defective parts found in the examinations above.
		Examine the address settings on the FCU PCB.
		Examine the configuration with the configuration software tool.
		If the equipment is interlocked via the RTILS mechanism, examine the other RTILS equipment.
Several units do not flash	At the first equipment that fails: the power supply is not within tolerances.	See problem 'System does not flash' and cause 'The power supply is not within tolerances'.
	At the first equipment that fails: the fuses or not present or not intact:	Replace the fuses.
	At the first equipment that fails: the equipment is not operational:	Examine the input supply voltage.
		Examine the equipment for damaged parts and replace the parts if necessary.
	At the first equipment that fails: the local bus communication does not run.	Examine the activity of the local bus communication in the LEDs (Rx local bus and Tx local bus) of the FCU PCB in the equipment cabinet.
		Examine the internal local bus cables.
		Examine the external local bus cables.
		Examine the local bus connection board PCB..
		Examine if any broken parts have an unwanted effect on the local bus cables.
	At the first failing control unit: the flashing request is not executed.	See problem 'System does not flash' and cause 'The flashing request is not executed'.
	At the first failing control unit: the dip-switches of dip-switch banks SW1 and SW2 of the FCU PCB are not correct.	Adjust the setting of the dip- switches.

Copyright ©2008—2026 ADB SAFEGATE, All Rights Reserved

Table 11: Troubleshooting guide

Problem	Possible cause	Possible solution(s)
One unit does not flash	The power supply is not within tolerances.	Adjust the power supply and make sure it is within tolerances
	The equipment is not operational.	See problem 'Several units do not flash' and cause 'The equipment is not operational'.
	The local bus communication does not run.	See problem 'Several units doe not flash' and cause 'The local bus communication does not run'.
	The flashing request is not executed.	See problem 'System does not flash' and cause 'The flashing request is not executed'.
	The dip-switches of dip-switch banks SW1 and SW2 of the FCU PCB of the equipment that fails are not correct.	▪ Replace the FCU PCB. See § 5.2.3 or 5.2.4. ▪ Adjust the settings of the dip- switch banks SW1 and SW2.
	The door micro-switch does not work correctly.	Replace the door micro-switch. See § 5.2.11.
	The lamp switch is not closed correctly.	Replace the lamp-trigger PCB.
	The capacitor does not charge at about 400 V DC.	Examine the input voltage.
		Examine the capacitor.
		Replace the FCU PCB. See §5.2.3 or 5.2.4.
		Examine if the flasher head is operational and the lamp life is not exceeded.
		Examine if the connection between the flasher head and the FCU PCB has a leak.
		With the configuration software tool, examine if the flasher steps are defined correctly.
	The choke is not correctly connected to the FCU PCB.	Connect the choke to the TRIG and RET terminals on the FCU PCB.
	The lamp is out of service.	Replace the flasher head.
One unit flashes incorrectly (intensity or timing)	The local bus communication does not run.	Examine the local bus cables.
		Examine the termination resistance of the local bus cables.
	The flashing request is not executed.	See problem 'System does not flash' and cause 'The flashing request is not executed'.
	The configuration (intensity level) is not correct.	Adjust the configuration with the configuration software tool.
	The dip-switches of dip-switch banks SW1 and SW2 of the FCU PCB are not correct.	Adjust the settings of the dip-switch banks SW1 and SW2.
	The door micro-switch does not work correctly.	Replace the door micro-switch. See § 5.2.11.
	The capacitor does not charge at about 400 V DC.	See problem 'One unit does not flash' and cause 'The capacitor does not charge at about 400 V DC.
	The choke is not correctly connected to the equipment board.	Connect the choke to the TRIG and RET terminals on the FCU PCB.

Copyright ©2008—2026 ADB SAFEGATE, All Rights Reserved

Copyright ©2008—2026 ADB SAFEGATE, All Rights Reserved

7.0 Checks and Measurements

7.1 Check Fuse Breaker and Voltage of Switch Board

1. Make sure that the main switch is OFF.
2. Check the nameplate of the equipment to make sure that the fuse breaker voltage of the switchboard is compatible with the equipment. Allowed variance by standards:
   - IEC: +10 %
   - FAA: +-10 %
3. Switch the main switch to ON.
4. Measure the voltage (V) of the switchboard. *Use a True RMS current clamp and protection gloves.*

7.2 Prepare to check Flashing System

Switch OFF power supply

1. Switch OFF the mains breaker that feeds the flashing system.
2. Switch OFF the fused input switches (A).
   - FCU-1: fuse holders F1 and F2;
   - FCU-3: fuse holders F1, F2 and F3;

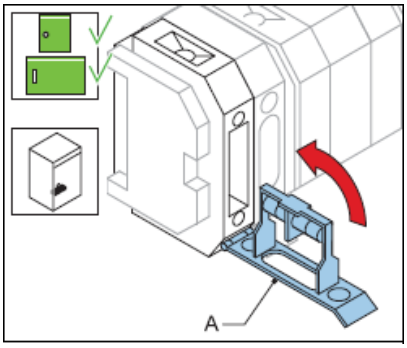

Set rotary switch of LMC to OFF

3. Set the rotary switch SW3 (A) of the LMC PCB to the OFF position.

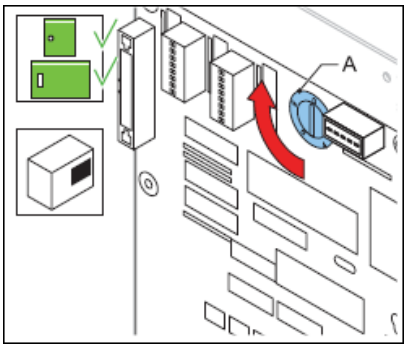

7.3 Check AC Power

1. Switch ON the mains breaker that feeds the flashing system.
2. Check if the mains is present and between the acceptance limits in al the equipment cabinets. *Use a True RMS multimeter.*

Copyright ©2008—2026 ADB SAFEGATE, All Rights Reserved

3. Check if the voltage (V) in the last equipment is not below the acceptable minimum.

Note

Carry out the same test when the flashing system has the brightness step 3 active.

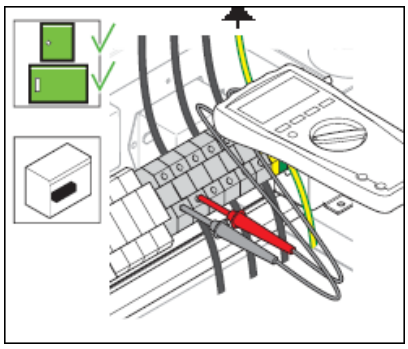

7.4 Check Equipment Cabinet with LMC

Set power to ON

1. Switch ON the mains breaker that feeds the flashing system.
2. Switch ON the fused input switches (A).
   - FCU-1: fuse holders F1 and F2;
   - FCU-3: fuse holders F1, F2 and F3;
3. Pull out the door switch. This simulates that the door is closed.

WARNING

The door switch is now in the ON position and the power in the cabinet is ON.

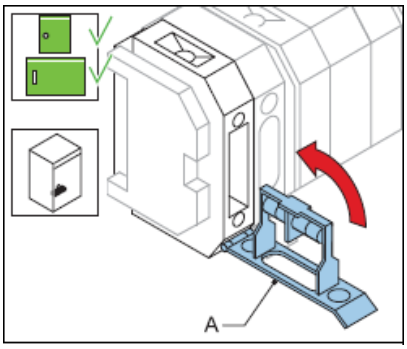

Check if the flasher heads flash at brightness step 1

4. Set the rotary switch SW3 (A) of the LMC PCB to the position 1. Brightness step 1 is now active.
5. Check the status of the LEDs of the equipment cabinet.
   - FCU PCB LEDs: see § 9.1.
   - LMC PCB LEDs: see § 9.3.

Note

For the FCU PCB, check the LEDs through the holes on the cover.

Copyright ©2008—2026 ADB SAFEGATE, All Rights Reserved

6. Check if the flasher head(s) of the equipment cabinet flash(es) correctly.

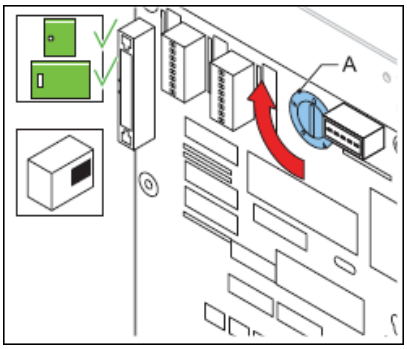

Check if the flasher heads flash at brightness steps 2 and 3

7. Set the rotary switch SW3 (A) of the LMC PCB to position 2 and 3.
8. Check if the flasher head(s) of the equipment cabinet flash(es) with the correct intensity.

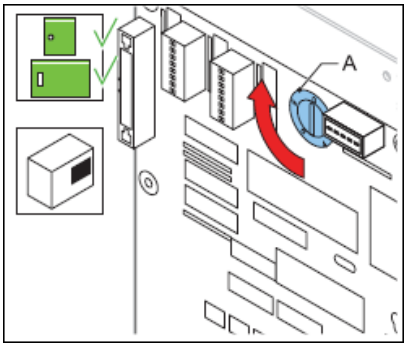

Finish

9. Select brightness step 1. *Set the rotary switch SW3 (A) of the LMC PCB to position 1*.

7.5 Check Equipment Cabinet without LMC

Set power to ON

1. Make sure the rotary switch of the LMC is in position 1, 2 or 3.
2. Switch ON the mains breaker that feeds the equipment cabinet.
3. Switch ON the fused input switches (A).
   - FCU-1: fuse holders F1 and F2;
   - FCU-3: fuse holders F1, F2 and F3;

Copyright ©2008—2026 ADB SAFEGATE, All Rights Reserved

4. Pull out the door switch. *This simulates that the door is closed*.

WARNING

The door switch is now in the ON position and the power in the cabinet is ON.

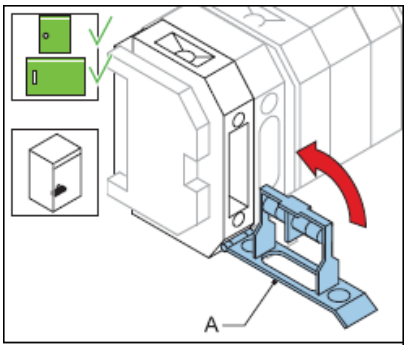

Check LEDs

5. Check the status of the LEDs of the FCU PCB. see § 9.1.

Note

Check the LEDs through the holes on the cover.

6. Check if the flasher head(s) of the equipment cabinet flash(es) correctly.
   Repeat
7. Repeat the procedure for all equipment cabinets.

7.6 Check Flashing Sequence

Check at brightness step 1

1. Set the rotary switch SW3 (A) of the LMC PCB to position 1.
2. Check if all the flasher heads flash in the correct order.
3. If this is not the case, check the equipment addresses of the flashing system. See § 4.3.

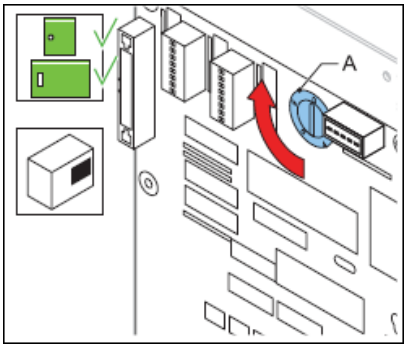

Check at brightness steps 2 and 3

4. Repeat the procedure with the rotary switch of the LMC in positions 2 and 3.

7.7 Measure Power Draw

Measure power draw on power supply that feeds flashing system

1. Measure the current on all phases. *Use a True RMS current clamp.*

Copyright ©2008—2026 ADB SAFEGATE, All Rights Reserved

2. Check the current:
   - For an equal number of units distributed over the 3 phases, make sure the current is less than 1 A RMS;
   - If there is a loading difference between the phases, make sure that it is less than 2.5 A RMS.

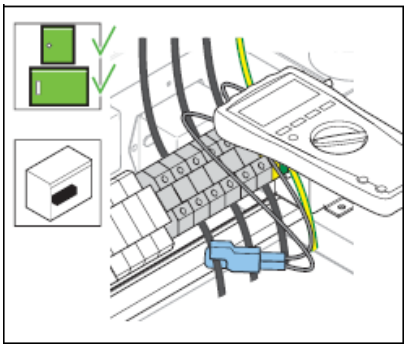

Copyright ©2008—2026 ADB SAFEGATE, All Rights Reserved

Copyright ©2008—2026 ADB SAFEGATE, All Rights Reserved

8.0 Configuration Software Tool

With the configuration software tool, you can perform these actions from a PC.

- Operate the flashing system;
- Configure the equipment

WARNING

When you activate the configuration software tool, you transfer all control of the equipment to the configuration software tool. In this situation, remote or local control of the equipment is not possible.

8.1 Install Configuration Software Tool on a PC

8.1.1 Requirements

System requirements:

- PC with Microsoft Windows 2000 or XP operation system;
- At least 50 Mbytes free disk space;
- 1 free serial communication (COM) port, or a virtual serial communication port over a USB bridge or a PCMCIA card;
- PC user account with either administrator or power user rights.

Configuration software tool package:

- 1 dongle with embedded software;
- 1 installation CD-Rom with a flasher program;
- 2 cables:
  - Extension cable (DB9M/DB9M-1,5 m);
  - Cable null modem (DB9F/DB9F-1,8 m).

8.1.2 Install Software

1. Open Windows Explorer.
2. In Windows Explorer, open the main folder of the installation CD-ROM.
3. Run the setup application file. *Follow the instructions of the installation program. The software is now installed*.
4. Copy the system upgrade files (.upl) from the installation CD to the directory where you installed the software.

8.2 Start Configuration Software Tool

8.2.1 Connect cables

1. Make sure the equipment is switched OFF. See § 5.2.2.
2. Open the cabinet door.
3. Connect the extension cable to the dongle (B) and to the PC connector of the cabinet (A). *You can connect directly to any equipment or to an LMC unit.*

Copyright ©2008—2026 ADB SAFEGATE, All Rights Reserved

4. Connect the cable null modem to the dongle (B) and to the serial communication port of the PC (C).

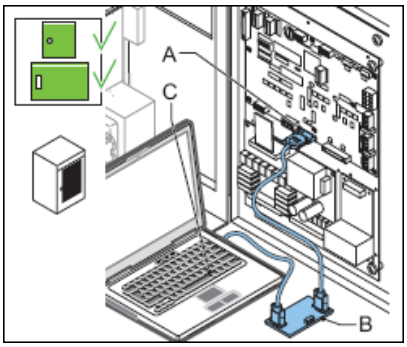

8.2.2 Start software

1. Switch the equipment ON.
   The equipment also supplies power to the dongle.
2. Click the FCU.exe file in the directory where you installed the software. *The configuration software tool opens.*
3. Select the menu Configuration.
4. Select the applicable serial communication port (COM) to which you connected the dongle.

Note

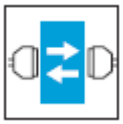

The baud rate and parity settings for the communication between the PC, dongle and the equipment must be the same. For the dongle, the default baud rate is 38400 and the default parity setting is EVEN.

5. The dongle automatically makes the connection to the equipment.

8.3 Upload new Firmware

Configuration software tool

1. Save the installation files of the new firmware to the PC.
2. Open the configuration software tool.
3. Go to menu **Configuration > Upload software** .
4. Select **Click here to upload** . *You can now see the available software versions on the PC.*

Copyright ©2008—2026 ADB SAFEGATE, All Rights Reserved

5. Select and confirm **GKFL** (dongle). The firmware is now uploaded.

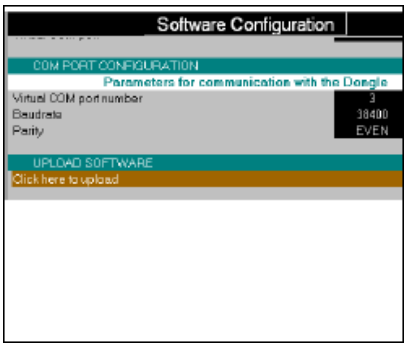

Local Master Controller (LMC)

Upload

6. Save the installation files of the new firmware to the PC.
7. Open the configuration software tool.
8. Go to menu **Configuration > Upload software** .
9. Select **Click here to upload**. *You can now see the available software versions on the PC.*
10. Select and confirm **LM** (LMC). *The software is now uploads.*
11. Wait until the firmware is successfully uploaded.

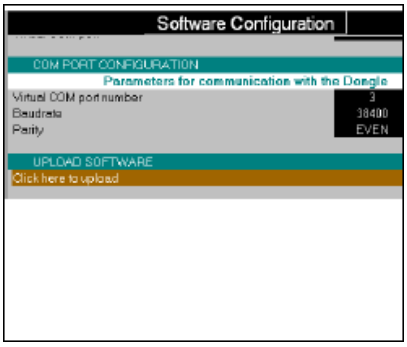

Reset LMC

Note

Only reset the LMC after a new firmware upgrade, to store the new factory default settings.

12. Set the dip-switch SW4.

Note

SW4/2 forces to initialize the E^2PROM setting to default factory setting.

13. Switch OFF the equipment cabinet, where the LMC is installed.
14. Leave the cabinet OFF for approximately 10 seconds.

Copyright ©2008—2026 ADB SAFEGATE, All Rights Reserved

15. Switch ON the cabinet, where the LMC is installed.

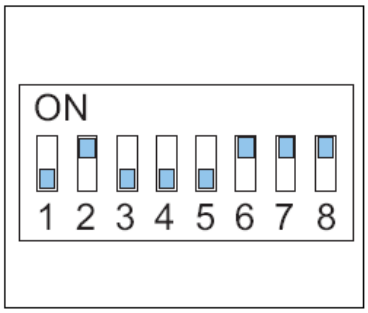

Finish

16. Set the dip-switch SW4.

Note

Make sure SW4/2 is OFF before any new power cycle to prevent to restore to the factory settings.

17. Configure the flashing system. See § 4.3.

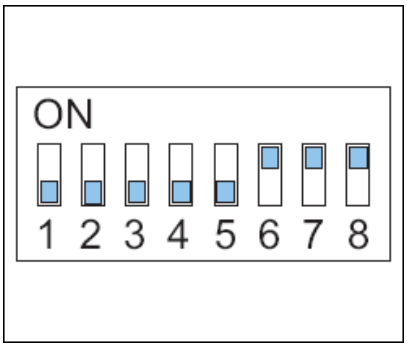

Firmware upload to FCU PCBs

18. Save the firmware upload files of the new software to the PC.
19. Open the configuration software tool.
20. Go to menu **Configuration > Upload software**.
21. Select **Click here to upload** . *You can now see the available software versions on the PC*.
22. Select and confirm **FCU**.
23. Select the specific FCU PCBs, the software of which you want to upgrade. *The software now uploads.*

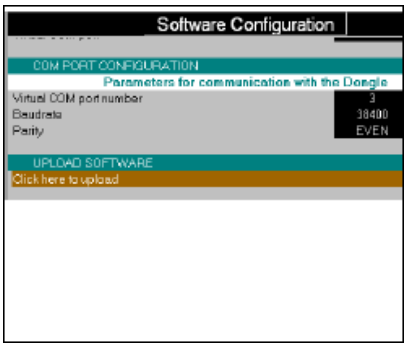

Copyright ©2008—2026 ADB SAFEGATE, All Rights Reserved

8.4 Description of Screens and Menus

8.4.1 Configuration Software Tool Screen

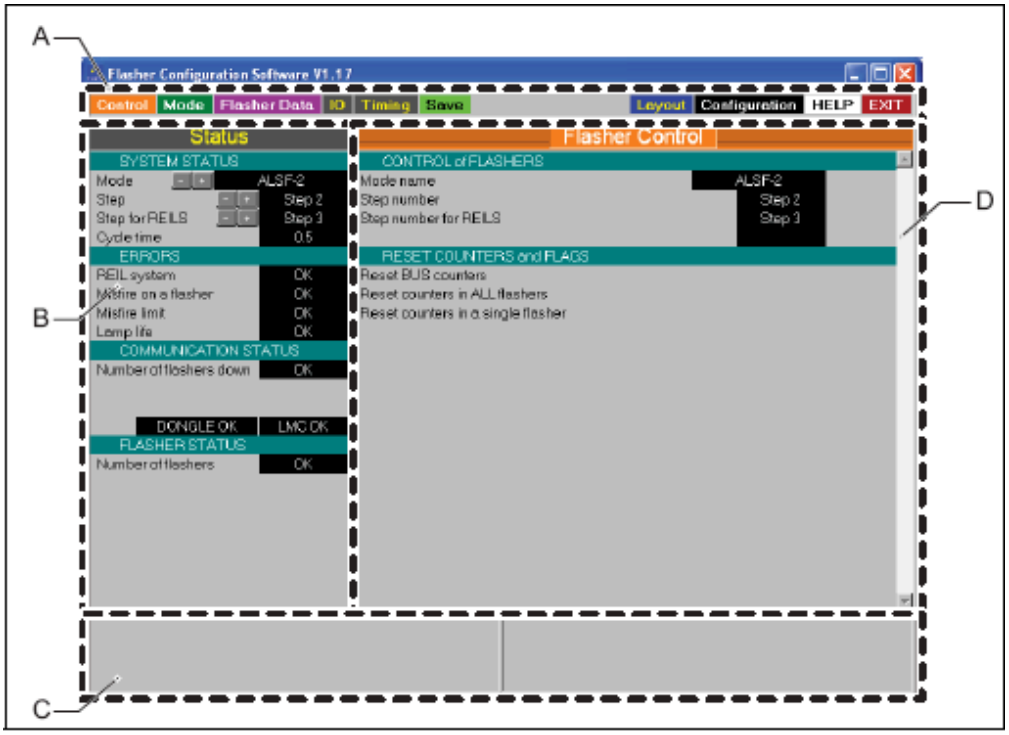

A Menu bar
B Status view
C Communication connection status view
D Active menu view

Table 12: Screen structure

Screen item	Description
Menu bar	The screen item shows the available menu items and the Exit button.
Status view	The screen item shows: ▪ The present status of the flashing system; ▪ Error messages; ▪ the status of the flasher heads. The screen item allows you to: ▪ Change the selected brightness step; ▪ Select the active circuits. This screen item is always visible.
Communication connection status view	The screen item shows possible communication errors between the dongle and the equipment.
Active menu view	The screen item changes when you select a menu item from the menu bar.

Copyright ©2008—2026 ADB SAFEGATE, All Rights Reserved

8.4.2 Control Menu

Table 13: Control menu

Item	Description
Mode name	To change the active flasher mode.
Step number	To change the active brightness step for the sequence flashers.
Step number for REILS	To change the active brightness step for the REILS units.
Reset bus counters	To reset the error counters for bus communication.
Reset counters in all flashers	To reset the misfire counters for all flasher heads.
Reset counters in a single flasher	To reset the misfire counters for a specific flasher head.

Note

Reset counters in all flashers or in a single flasher, for example, after you replace a broken flasher head.

8.4.3 Mode Menu

Table 14: Mode menu

Item	Description
Operational modes	To check or adjust the predefined mode settings.
Details of mode	

CAUTION

Be careful when you change the settings. If you change the settings of an active mode, the changes will become effective immediately.

Note

If you change the cycle time, the number of flashes per second also changes.Configuration software tool

8.4.4 Flasher Data Menu

Status menu

Table 15: Status menu

Item	Description
Individual flasher state	The menu shows the on-line status of all flashers in the system.

Active state menu

Table 16: Active state menu

Item	Description
Individual active state	The menu shows ▪ The actual state of each flasher head; ▪ The latest requested step; ▪ The latest requested mode.

Copyright ©2008—2026 ADB SAFEGATE, All Rights Reserved

Note

If there is a difference between the actual state and a requested state, the difference is shown in s.

Misfire state and counter menu

Table 17: Misfire state and counter menu

Item	Description
Individual misfire state	To set a misfire limit for each flasher in the system.

Note

The limit is based on the number of misfires a flasher head is allowed before an alarm is sent.

In this menu, you can only change the limit field.

The misfire limit for a REILS or RTILS flashing system must be set to 1 to comply with FAA-E-2628B and FAA-E-2980.

Flasher counter limit menu

Table 18: Flasher counter menu

Item	Description
Individual flash limit	To set a lamp life limit for each flasher head in the system.

Note

The limit is based on the number of flashes a flasher head is allowed to produce before replacement is necessary.

In this menu, you can only change the limit field.Configuration software tool

Flasher temperature data menu

Table 19: Flasher temperature menu

Item	Description
Individual temperature parameters	The menu shows: ▪ The temperature inside the equipment cabinets; ▪ If the external temperature probe (option) is installed, the menu also shows temperature outside the cabinets and the possible difference between the two temperatures. The menu allows you to set minimum and maximum allowed temperatures.

Flasher security menu

Table 20: Flasher security menu

Item	Description
Security parameters	The menu shows the status of all MOV modules and door switches in the system.

Copyright ©2008—2026 ADB SAFEGATE, All Rights Reserved

Example: FCU-3 cabinets:

- If the door switch status is open for only one flasher head, the lamp cover may be open.
- If the door switch status is open for all three flasher heads, the equipment cabinet door is open.

Flasher steps menu

Table 21: Flasher steps menu

Item	Description
Steps	To configure the intensity level steps (1-3) separately for each flasher head in the system.

CAUTION

If you change the settings of an active step, the changes will take effect immediately.

Software version menu

Table 22: Software version menu

Item	Description
Master and flasher software version	The menu shows the firmware and boot versions present in the system.

Example: LMC, dongle, and flasher heads.

Read communication counters menu

Table 23: Read communication counters menu

Item	Description
Read communication counters	The menu shows the status of communication counters for individual flasher heads.

Note

To request the status for a specific flasher head, enter the flasher head number in the field ‘Request read from flasher'.

Read flasher counters menu

Table 24: Read flasher counters menu

Item	Description
Read flash counters	The menus shows the status of flash counters for individual flashers.

Note

To request the status for a specific flasher head, enter the flasher head number in the field ‘Request read from flasher'.

Copyright ©2008—2026 ADB SAFEGATE, All Rights Reserved

8.4.5 IO Menu

Table 25: IO menu

Item	Description
Hardware present	Shows the detected hardware modules.
IO Arbiter	To set: ▪ the signal source for remote control; ▪ a priority for different systems. If IO Arbiter is set to disabled, remote control is not possible.
Local Kill	To disable local control.
Default	To set parameters for default mode operation. These parameters are used during a communication failure between the unit and remote control.
Bus	▪ To change the J-Bus baudrate and parity settings separately for Bus A and Bus B; ▪ To monitor the slave number values. Only if J-Bus is enabled.
Multiwire	To change the back-indication/control functions of each signal for multiwire 1.
Custom back-indication	To define two customized back-indication alarms. You can select these as back-indication signals in the Multiwire section.

8.4.6 Timing Menu

Table 26: Timing menu

Item	Description
Measurement time	To define a time window in s, in which the system measures the time between flashes.

Display the data

1. Set the measurement time (s).
2. Select a step.
3. Press Go.
4. Press Display.

8.4.7 Save Menu

Table 27: Save menu

Item	Description
Save	To save the IO settings parameters as a profile on your PC.
Restore	To upload a previously saved IO settings profile to the unit.

8.4.8 Layout Menu

This menu allows you to define the layout for all the flashers in the system. The system uses this layout to determine in which order the units flash during a flashing sequence.

Copyright ©2008—2026 ADB SAFEGATE, All Rights Reserved

CAUTION

Set the layout in a logical order. It must match the actual order of flashers in the approach area. For example, the first flasher is the one that is furthest away from the runway.

Table 28: Layout menu

Item	Description
Program	To transmit the changes made in this menu to: ▪ the LMC; ▪ the rest of the flashing system.
Number of devices	To define the number of flashers and boxes (cabinets) in the system. If you change these settings, the layout section changes also.
Layout	To: ▪ Show the cabinets and the flasher heads in the system. ▪ Set a slave number and a sequence number for each flasher head. Based hereupon, the flashing system determines the order in which the flasher heads flash in the flashing sequence.

8.4.9 Configuration Menu

Table 29: Configuration menu

Item	Range
Communication port	To select the serial communication port the PC uses to connect to the dongle.
COM port configuration	To change the baudrate and parity parameters for the serial communication port.
Upload software	To upload a new software version for a module. Each module has its own software version that can be changed when a new release becomes available.
Language selection	Shows the available languages for the configuration software tool. The default language is English.

Upload a software file

1. Save the file to the installation menu of the configuration software tool. *The screen shows the available software versions.*
2. Click a file. *The upload starts.*

Copyright ©2008—2026 ADB SAFEGATE, All Rights Reserved

9.0 PCB Drawings and Settings

9.1 FCU - PCB1487

The FCU PCB is a CPU-controlled PCB that receives input messages from the LMC or the dongle, via the local bus interface. The FCU PCB has no direct connection to the remote control system of the user. The PCB contains a SMPS to charge the flash energy capacitor and has the necessary hardware to drive and monitor the flasher head. It counts the number of misfires and sends error messages back to the LMC. If the number of flashes exceeds the lifetime of the flasher head, an error is also sent back.

9.1.1 Layout of the Printed Circuit Board (PCB)

The board has a fuse (A) of 2AT or 2AF, 5 x 20 with 1.5 A breaking capability.

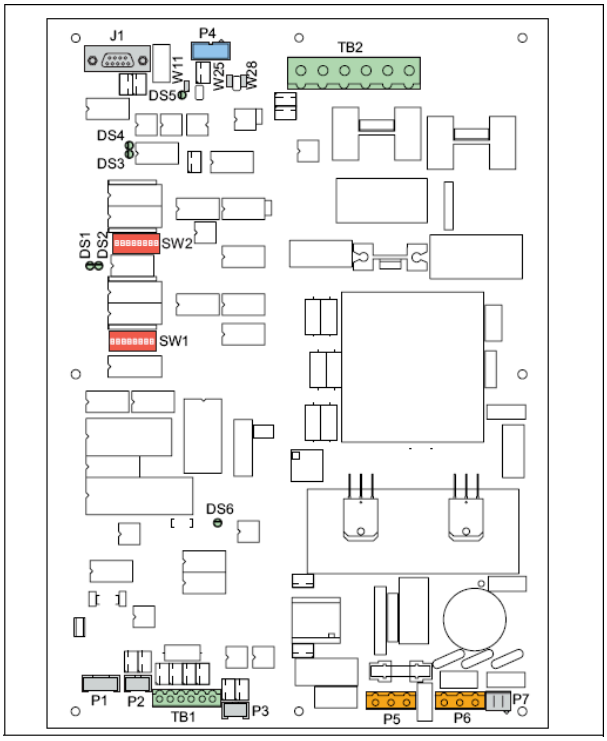

9.1.2 Connectors

Table 30: FCU PCB connectors

Name	Type	Description	Factory wiring	External wiring	Notes
P1	5-pin Stocko	To monitor the temperature sensor.	x		Only one temperature sensor per flashing system that is connected to the LMC.
P2	3-pin Stocko	To monitor the door contact.	x		
P3	3-pin Stocko	To monitor the MOV modules.	x		
P4	10-pin flat cable	To connect a local bus.	x		
P5	3-pin Wago	To connect a heater resistance.	x		Only one heater resistance per equipment cabinet.
P6	3-pin Wago	Mains supply	x		

Copyright ©2008—2026 ADB SAFEGATE, All Rights Reserved

Table 30: FCU PCB connectors

Name	Type	Description	Factory wiring	External wiring	Notes
P7	3-pin Molex	Mains supply for the DC power supply.	x		**CAUTION** If the DC power supply is not connected to this board. Make sure a dummy plug on P7 is installed to avoid accidental contact with the mains supply.
J1	SUBD9	To connect the dongle (option).		x	To set parameters for the SFL.
TB1	6-pin Phoenix	To connect the DC supply.	x		A return connection from the DC power supply.
TB2	6-pin Phoenix	Connect the flasher head.		x	
J2, J3	Fast-on	To connect the capacitor.	x		**CAUTION** Make sure that you connect the polarity appropriately. The red wire must go to the +).
J4, J5	Fast-on	Connect the coil.	x		

Table 31: Wire connections for TB2 for UEL type flasher head

Connection number on the flasher head	Connector name on the flasher head	Connector name on TB2	Wire color
1	Trigger: Lamp cathode	TRIG	Brown
2	+400V: Lamp anode	+400V	Blue
3	PE	PE	Yellow/Green
4	Cab+	Cab+	Black
5	Cab-	Cab-	Black

Table 32: Wire connections for TB2 for FFL type flasher head

Pin-hole on the flasher head receptacle	Connector name on TB2	Wire color	Wire label
1	Cab-	White	Blue-6
2	TRIG	White	Brown
3	+400V	Black	Red

Copyright ©2008—2026 ADB SAFEGATE, All Rights Reserved

Table 32: Wire connections for TB2 for FFL type flasher head

Pin-hole on the flasher head receptacle	Connector name on TB2	Wire color	Wire label
4	Cab+	Black	Orange-3
5	PE	Black	Green-Yellow54

The illustration shows the connections on TB2 (A to E) and the pin-hole numbers on the receptacle for a FFL type flasher head (F)

- A: Cab-
- B: Cab+
- C: PE
- D: +400 V
- E: TRIG

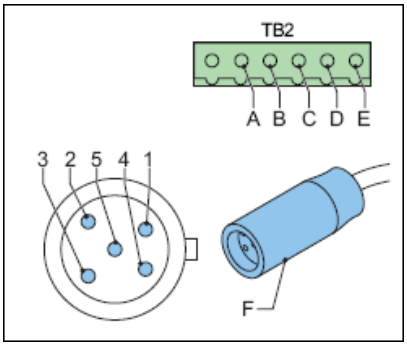

9.1.3 Straps

The straps are used to terminate the local bus, where necessary.

To set the resistors, set the straps as follows:

Table 33: FCU straps

Strap	Bus use	Resistor 680 Ohm		Terminating resistor 150 Ohm
		Pull up	Pull down	
W11	Local bus		x	
W28				x
W25		x		

Table 34: Resistor settings

Resistor [E]	Description
150	Terminates the bus.
680	There is always two types of 680 E resistors: ▪ Pull-up resistor on the positive bus wire; ▪ Pull-down resistor on the negative wire.

Copyright ©2008—2026 ADB SAFEGATE, All Rights Reserved

9.1.4 Dip-switches

CAUTION

Restart the equipment after you change the switch settings. The changes only become effective after you restart the equipment.

CAUTION

Only change the baud rate and parity of the local bus if you experience severe communication problems between units. In this case, change all the FCU PCBs to the same baud rate and parity.

Table 35: FCU PCB dip-switch settings

Dip-switch bank	Type	Setting		Use	Remarks
SW2	Dip	xxxxxxxx		Slave number of the LMC (local bus). Must be unique for each equipment.	Valid values: 1-32 (binary code)
SW1	Dip	1	OFF	Internal use	
		2	OFF		
		3	OFF		
		4	OFF		
		5+	OFF	Baud rate local bus 9600 baud	
		6	OFF		
		5+	ON	Baud rate local bus 19200 baud	
		6	OFF		
		5+	OFF	Baud rate local bus 38400 baud	Factory settings
		6	ON		
		5+	ON	Invalid	
		6	ON		
		7+	OFF	No parity	
		8	OFF		
		7	ON	Valid (no parity)	
		8	OFF		
		7	OFF	Local bus Odd parity.	
		8	ON		
		7	ON	Local bus Even parity	Factory settings
		8	ON		

Copyright ©2008—2026 ADB SAFEGATE, All Rights Reserved

9.1.5 LEDs

Table 36: Functions

LED	Indication	Status	Notes
DS1	FLASH command	Duration is proportional to the selected step.	
DS2	RUN	One flash per second	Higher rate during software upload
DS3	Rx local bus	Normally OFF Lights up momentarily during transmission or reception.	If one of these LEDs is permanently OFF, there is no traffic on the corresponding bus.
DS4	Tx local bus		If one of these LEDs is permanently ON, there may be polarity inversion on the bus.
DS5	Isolated supply local bus	ON	
DS6	FLASH	ON during flash request	Hardware flash command to IGBT Driver

9.2 Local Bus Connection Board - PCB1498

The local bus connection board is a small PCB that provides the interconnection of the local bus between the equipment cabinets.

9.2.1 Layout of the Printed Circuit Board (PCB)

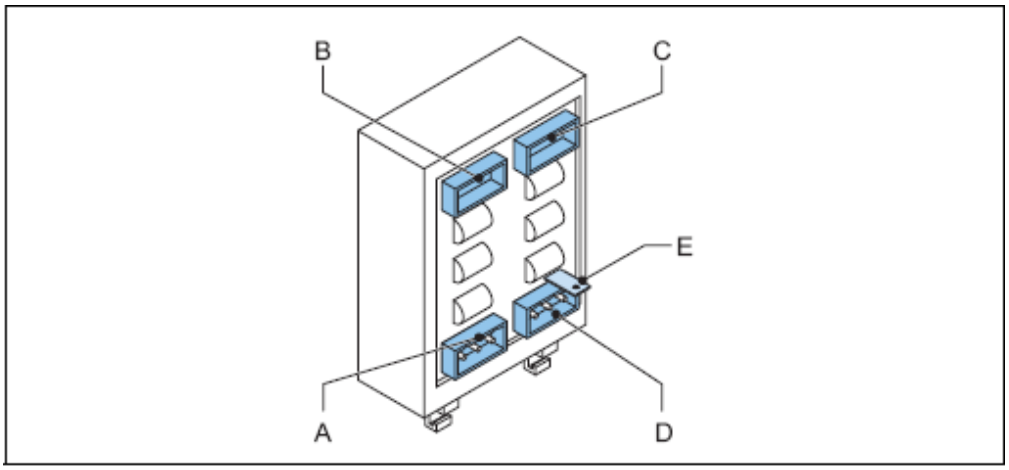

A P1
B P2
C P4
D P3
E Connection to earth

9.2.2 Connectors

Table 37: Local bus connectors

Connector	Description
P2 and P4	To distribute the internal distribution of the bus signal. The internal distribution is fixed on delivery.
P1 and P3	To connect the local bus to the other cabinets in the system.

Copyright ©2008—2026 ADB SAFEGATE, All Rights Reserved

9.3 Local Master Controller (LMC) - PCB1513

9.3.1 Layout of the Printed Circuit Board (PCB)

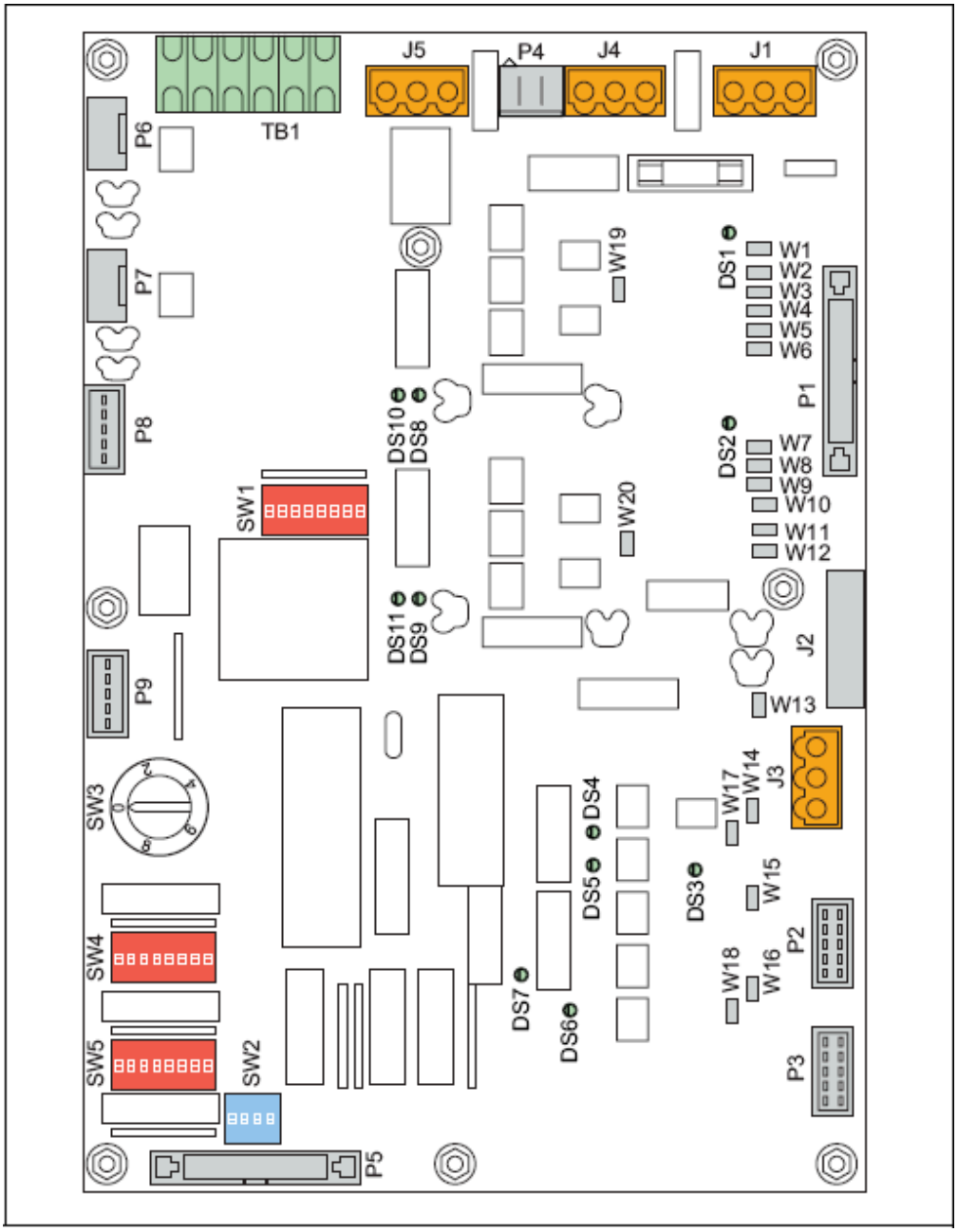

9.3.2 Straps

Table 38: LMC PCB straps

Strap	Bus use	Rx / Tx	Resistor 680 ohms		Terminating resistor 150 ohms
			Pull up	Pull down	
W1	Remote Bus A	TX-		x	
W2		TX+	x		
W3		TX			x

Copyright ©2008—2026 ADB SAFEGATE, All Rights Reserved

Table 38: LMC PCB straps

Strap	Bus use	Rx / Tx	Resistor 680 ohms		Terminating resistor 150 ohms
			Pull up	Pull down	
W4		Rx+	x		
W5		Rx-		x	
W6		Rx			x
W7	Remote Bus B			x	
W8		TX			x
W9		TX+	x		
W10		TX-		x	
W11		Rx+	x		
W12		Rx			x
W13	Reserved			x	
W14		+	x		
W15	Local bus			x	
W16		+	x		
W17	Synchro line				x
W18	Local bus				x
W19	Bus A	Between 1 and 2		Wiring of the bus: 2 wires (RS485)	
		Between 2 and 3		Wiring of the bus: 4 wires (RS422)	
W20	Bus B	Between 1 and 2		Wiring of the bus: 2 wires (RS485)	
		Between 2 and 3		Wiring of the bus: 4 wires (RS422)	

9.3.3 Rotary and Dip-switches

If not specifically noted, all the switches are read only at power-up. If you change a switch setting, restart the equipment before the changed comes into effect.

CAUTION

SW4/2 clears all the parameters, including the system layout. In this case, restore the parameters with the configuration software tool, or use the dip- switches.

Table 39: LMC PCB dip-switch settings.

Dip-switch bank	Type	Setting		Use	Remarks
SW1	Dip	xxxxxxxx		Slave number of the LMC J-Bus slave adress. The factory default is set to 1. Another number is also possible.	Valid values: 1-16 (binary code). This switch is only used for the remote control bus. If multiwire is used, this switch is not applicable.
SW2	Dip	1+	2		Manual configuration SW4 /4
		OFF	OFF	16 ms interval time	

Copyright ©2008—2026 ADB SAFEGATE, All Rights Reserved

Table 39: LMC PCB dip-switch settings.

Dip-switch bank	Type	Setting		Use	Remarks
		ON	OFF	33 ms interval time	
		OFF	ON	66 ms interval time	
		ON	ON	Invalid	
		3	ON	Declaration of REILS	
		4	ON	1 cycle per s	
			OFF	2 cycles per s	
SW3	Rotary	0		Flashing system OFF	
		1		Step 1	
		2		Step 2	
		3		Step 3	
		9		Remote control	
SW4	Dip	1	OFF	Enables the rotary switch SW3 to control the mode	
			ON	Hardware local kill ON	No control with SW3
		2	OFF	1	
		3	OFF	2	
		4	OFF	Set the configuration with the dongle and the configuration software tool	
			ON	Set the configuration manually with SW2 and SW5	
		5+	6		
		OFF	OFF	Baud rate local bus 9600 baud	
		ON	OFF	Baud rate local bus 19200 baud	
		OFF	ON	Baud rate local bus 38400 baud	Factory settings
		ON	ON	Invalid	
		7+	8		
		OFF	OFF	No parity	
		ON	OFF	Invalid (no parity)	
		OFF	ON	Local bus Odd parity	
		ON	ON	Local bus Even parity	Factory settings
SW5	Dip	1 > 6		Number of equipments in the system	Manual configuration SW4
		7		Not in use	
		8	OFF	To disable the use of the dongle.	

Copyright ©2008—2026 ADB SAFEGATE, All Rights Reserved

Table 39: LMC PCB dip-switch settings.

Dip-switch bank	Type	Setting		Use	Remarks
			ON	To enable the use of the dongle	
1) Initiates the data E^2PROM. The LMC stores the system parameters in an E^2PROM. At first power-up or when the system must be completely reconfigured, it is possible to clear the E^2PROM and return to the default factory settings. To do this, put the switch to ON, power down the LMC and turn it ON again after 5 s. Set the switch back to OFF. If this is not the case, the E^2PROM will be cleared at the next power cycle. 2) Lock to boot. This switch is always OFF in a functioning system. Use this only if there is a major problem when you upload a new application code.					

9.3.4 LEDs

Table 40: Functions

LED	Function	Status	Notes
DS1	Isolated supply Bus A	ON	
DS2	Isolated supply Bus B		
DS3	Isolated supply local bus.		
DS4	Reserved		For future use
DS5	RUN.	One flash per s	Higher rate during software upload.
DS6	Rx local bus	Normally OFF. Lights up momentarily during transmission or reception	If one of these LEDs is permanently OFF, there is no traffic on the corresponding bus.
DS7	Tx local bus		
DS8	Rx Bus A		
DS9	Tx Bus A		If one of these LEDs is permanently ON, there may be polarity inversion on the bus.
DS10	Rx Bus B		
DS11	Rx Bus A		

9.4 Multiwire - PCB1486

Note

It is impossible to attribute the same function to more than one terminal.

Copyright ©2008—2026 ADB SAFEGATE, All Rights Reserved

9.4.1 Layout of the Printed Circuit Board (PCB)

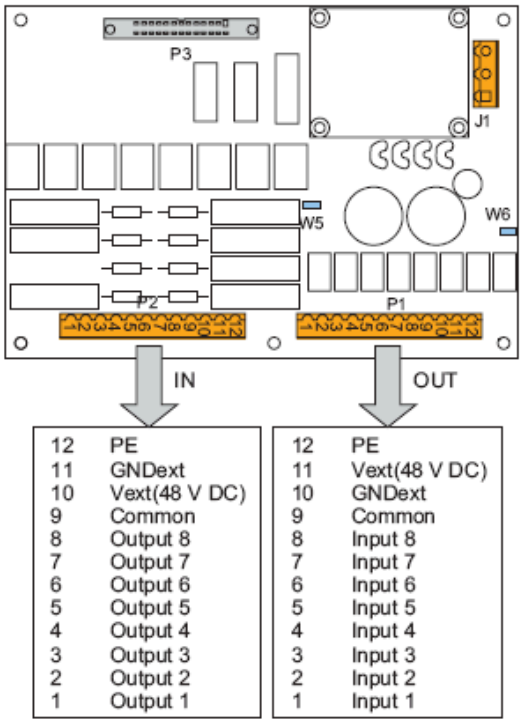

9.4.2 Straps

Table 41: Multiwire PCB straps

Strap	Description
W5	Internal voltage for remote control.
W6	Internal voltage for back indication signals.

9.4.3 Connectors

Table 42: Multiwire PCB connectors

Connector	Connection to
P1	Back-indication/output signals The connector type is WAGO 231-312/026-000 cage-clamp connector. This connector can accept wires of 0.08 to 2.5 mm2 (28 - 12 AWG).
P2	Control/input signals The connector type is WAGO 231-312/026-000 cage-clamp connector. This connector can accept wires of 0.08 to 2.5 mm2 (28 - 12 AWG).
P3	Flat cable connection to the LMC.
J1	Power supply to the multiwire interface PCB

9.4.4 Input Terminals

The table shows examples of functions you can configure to the input connector P2. Each signal must have its own wire. In addition, each board must have a separate wire for a common earthing.

Copyright ©2008—2026 ADB SAFEGATE, All Rights Reserved

Table 43: Functions for connector P

Function	Description
Step 1	If one of the contacts is activated, the equipments switch ON at the selected step. If nothing is activated, the equipment goes OFF. Note that if more than 1 terminal is activated simultaneously, then the highest step takes precedence.
Step 2	
Step 3	
REILS STEP 1	When activated, this switches the REILS ON at step 1.
REILS STEP 2	Activates the REILS (RTILS) in step 2.
REILS STEP 3	Activates the REILS (RTILS) in step 3.
Reset misfire	If there was a latched misfire condition, activate this terminal to clear.
Mode Select Bit 0	It is possible to select one of the first 4 modes via the Multiwire. By default mode 1 is used. If only the mode select bit 0 is attributed to a terminal, it selects mode 0 (OFF) or 1 (ON). If both functions are attributed to 2 terminals, then modes 2 and 3 can also be selected. Bit 0 Bit 1 0FF OFF Use mode 1 ON OFF Use mode 2 OFF ON Use mode 3 ON ON Use mode 4
Mode Select Bit 1	

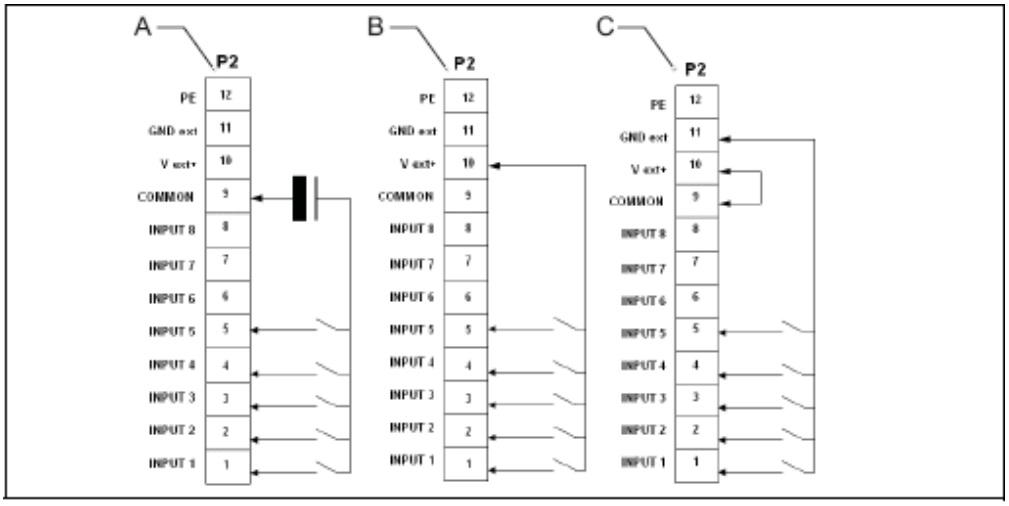

A With external power supply
B With internal power supply (polarized contacts positive)
C With internal power supply (polarized contacts negative)

Table 44: Connection P2 wires, per power supply type

Back indication	External power supply (A)	Internal power supply (polarized contacts positive) (B)	Internal power supply (polarized contacts negative) (C)
Remarks	Remove strap W5, 24 V DC (PCB 1593.13.511) 48 V DC (PCB 1593.13.521)	Install strap W5	Remove strap W5

Copyright ©2008—2026 ADB SAFEGATE, All Rights Reserved

9.4.5 Output Terminals

The table shows an example of functions you can configure to the output connector P1. Each signal must have its own wire. In addition, each board must have a separate wire for a common earthing. The functions have two custom contacts, custom 1 and custom 2. You can switch the custom contacts on or off.PCB drawings and settings

Table 45: Functions for connector P1

Function	Condition	Custom 1	Custom 2	Description
REILS DOWN		ON/OFF	ON/OFF	If there is a misfire on 1 of the REIL FCUs and the other one is switched OFF automatically, then this terminal is activated.
Misfire on one flasher head	Fugitive	ON/OFF	ON/OFF	The terminal contacts are activated when the misfire(s) occur(s) and are released at the next correct flash.
Misfire on at least two flashers heads	Fugitive	ON/OFF	ON/OFF	
Misfire on two consecutive flasher heads	Fugitive	ON/OFF	ON/OFF	
Misfire on one flasher head	Latched	ON/OFF	ON/OFF	The terminal contacts are activated when the error occurs. They remain active until the Reset Misfire contact is activated.
Misfire on at least two flashers heads	Latched	ON/OFF	ON/OFF	
Misfire on two consecutive flashers heads	Latched	ON/OFF	ON/OFF	
Misfire limit reached	Latched	ON/OFF	ON/OFF	This terminal is activated if the number of misfires exceeds the limit on at least one equipment. To clear the condition, activate the reset misfire function.
Flasher head life limit reached	Latched	ON/OFF	ON/OFF	This terminal is activated if the number of flashes exceeds the lamp life time on at least one equipment. The condition is cleared by activating the reset misfire function.
Over temperature		ON/OFF	ON/OFF	When the inside temperature of an equipment or the LMC exceeds the programmed maximum temperature, this terminal goes active. As soon as the temperature drops under the limit on all the devices, the terminal goes inactive again.
Communication problems on local bus		ON/OFF	ON/OFF	If the LMC cannot contact one of the equipments this terminal is activated. As soon as the condition is repaired and the equipment is back on line, the terminal goes inactive
Security (DOOR open + MOV blown)		ON/OFF	ON/OFF	The security parameters check for defects in the protection of the Control units (MOV) or intrusion (DOOR open). As soon as the condition is repaired or the door closes, the terminal goes inactive again.
Security (DOOR open)		ON/OFF	ON/OFF	
Security (MOV blown)		ON/OFF	ON/OFF	
Free		ON/OFF	ON/OFF	This terminal is not in use.
Flasher RUNNING		ON/OFF	ON/OFF	Contact is closed when the flasher system received a valid step + mode command.
REILS RUNNING		ON/OFF	ON/OFF	You can switch the REILS ON or OFF onto custom contact 1 or 2

Copyright ©2008—2026 ADB SAFEGATE, All Rights Reserved

The back-indication signals may be provided:

- Over dry contact relays;
- Over polarized contacts (positive or negative).

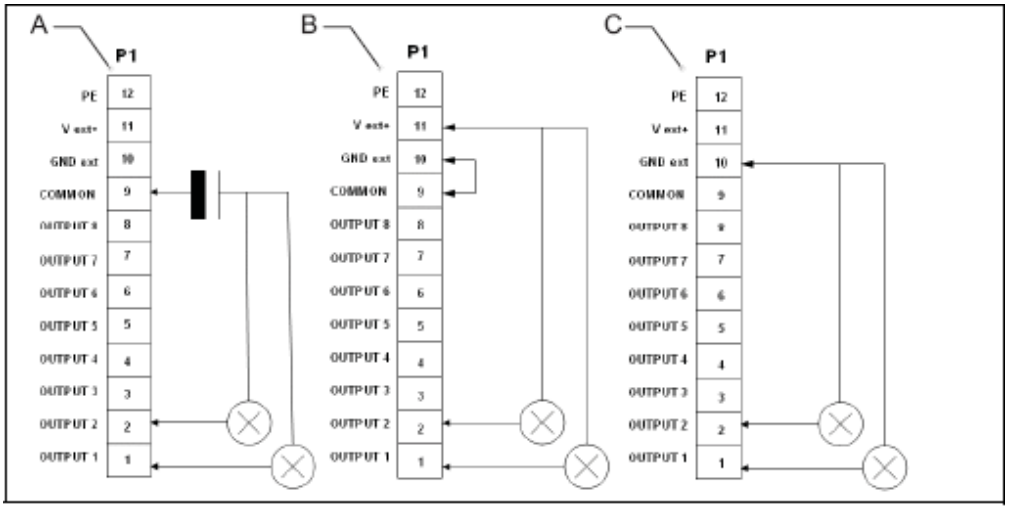

A With external power supply
B With internal power supply (polarized contacts positive)
C With internal power supply (polarized contacts negative)

Table 46: Connect P1 wires, per power supply type

Back indication	External power supply (A)	Internal power supply (polarized contacts positive) (B)	Internal power supply (polarized contacts negative) (C)
Remarks	Remove strap W6, Max. 110 V DC, polarity is not important	Remove strap W6	Install strap W6

9.4.6 Control Signals

The control signals feed relay coils. An RC circuit protects the relay coils for transient over- voltage.

Table 47: Multiwire options

Multiwire	48 VDC remote control	24 VDC remote control
Minimum voltage	40 VDC	21.6 VDC
Maximum voltage	65 VDC	35 VDC
Current consumption	Approximately 9 mA at 48 VDC	Approximately 16 mA at 24 VDC

The multiwire back-indication signals are provided over dry contact relays. The maximum contact load is:

- AC - 110 V -0.5 A - 60 VA;
- DC - 110 V -0.5 A - 30 W.

9.4.7 Multiwire Default Settings

This section shows the default multiwire settings. These settings apply to LMC software version 1.21.

Back-indication signals

You can modify the settings at any time with the configuration software tool.

Copyright ©2008—2026 ADB SAFEGATE, All Rights Reserved

Table 48: Default back-indication signals

P1	Signal	Function
1	Output 1	SFL running - contact closed when running
2	Output 2	RTILS/REILS running - contact closed when running
3	Output 3	REILS DOWN - contact closed in case of alarm
4	Output 4	Misfire on 1 FCU (latched) - contact closed in case of an alarm
5	Output 5	Misfire on 2 consecutive FCUs (latched) - contact closed in case of an alarm
6	Output 6	Communication error on local bus + Security (Door + MOV) – contact open in case of an alarm
7	Output 7	Over temperature – contact closed in case of an alarm
8	Output 8	Custom 1
9	Common	Common output signals
10	GNDext	Earthing multiwire PCB
11	Vext+	Power supply from multiwire PCB (24 V or 48 V)
12	PE	Earth connection

Remote control signals

You can modify the settings with the configuration software tool.

Table 49: Default remote control signals

P1	Signal	Function
1	Input 1	SFL ON Step 1
2	Input 2	SFL ON Step 2
3	Input 3	SFL ON Step 3
4	Input 4	REILS/RTILS ON step 1
5	Input 5	REILS/RTILS ON step 2
6	Input 6	REILS/RTILS ON step 3
7	Input 7	Reset alarms
8	Input 8	Free
9	Common	Common input signals
10	GNDext	GND multiwire PCB
11	Vext+	Power supply from multiwire PCB (24 V or 48 V)
12	PE	Earth connection

9.5 J-Bus Connection - PCB1502

The PCB provides the connection between the user J-Bus(ses) and the LMC.

The J-Bus interface uses a single or dual databus(es) to allow remote monitoring of a bigger quantity of parameters.

An equipment is always a slave on the J-Bus. There can be a maximum of 31 equipments on one bus section with one common bus master.

Copyright ©2008—2026 ADB SAFEGATE, All Rights Reserved

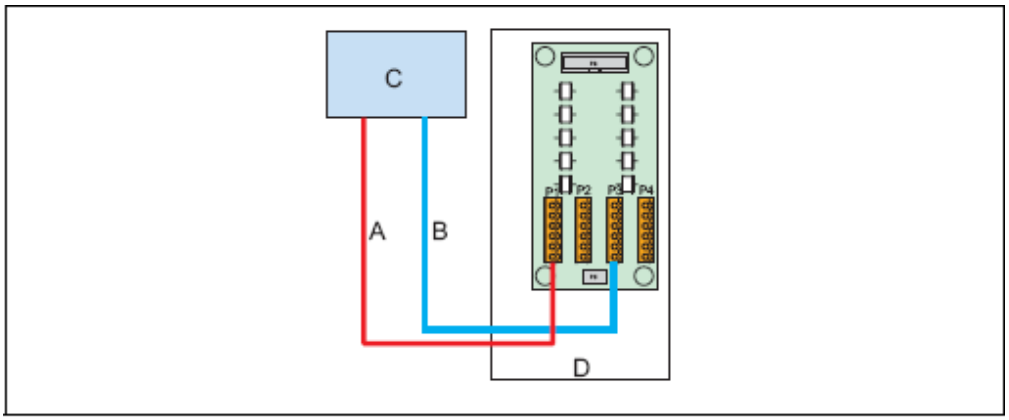

A Bus A
B Bus B
C Master (in the substation)
D Slave 000001(value set on the dipswitch bank SW1 of the LMC PCB)

9.5.1 Layout of the Printed Circuit Board (PCB)

The PCB provides the interconnection of the user J-Bus(ses) with the LMC. The PCB has gas arresters for overvoltage protection.

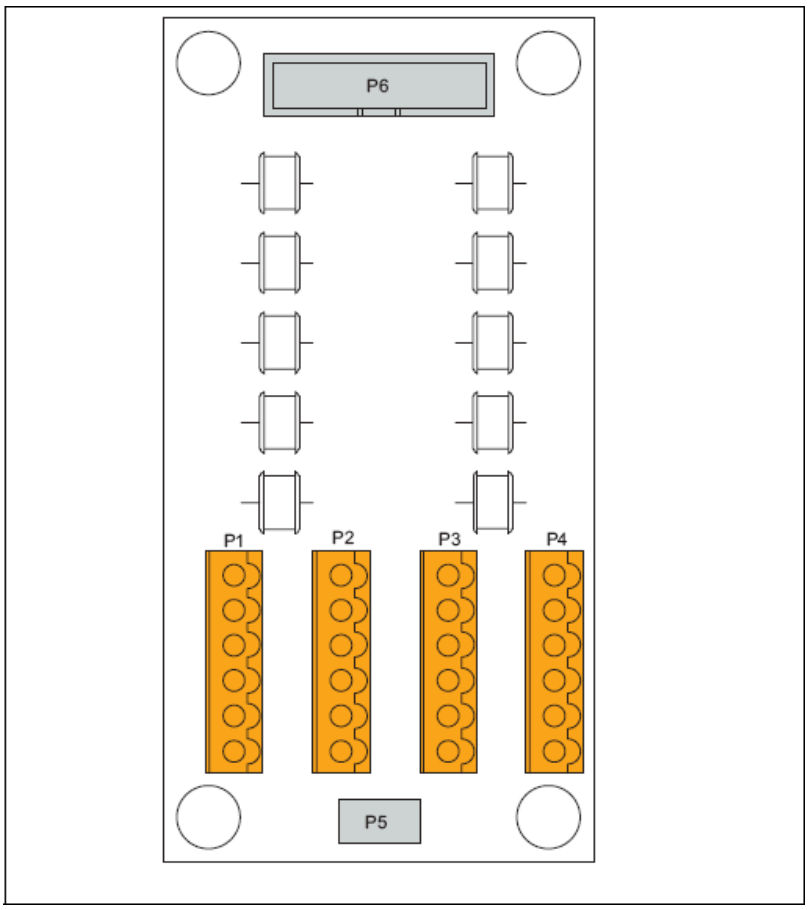

Description:

- P1: Bus A connection to the substation on the master;
- P3: Bus B connection to the substation on the master;
- P5: PE.

Copyright ©2008—2026 ADB SAFEGATE, All Rights Reserved

9.5.2 Connectors

Table 50: J-Bus connectors

Connector	Description
P1	Meant for the connection of Bus A from the previous user on the system.
P3	Meant for Bus B.

Table 51: Wiring for connectors P1-P4

Wire	Description
1	Tx +
2	Rx +
3	Tx -
4	Rx -
5	0V
6	PE

9.5.3 Slave Connections

The figures show the wire connections for the slave side. The connections for the master side depend on the used hardware.

J-bus type	Single J-bus: Bus A P1	Dual J-bus: Bus A P1 and Bus B P3
Two wire RS485	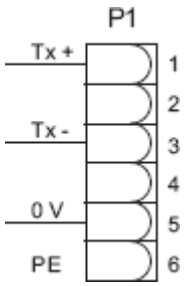	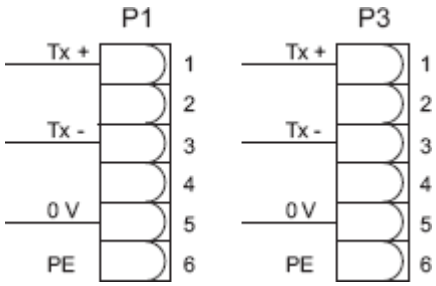
Four wire RS422	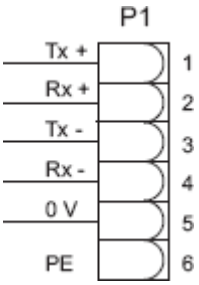	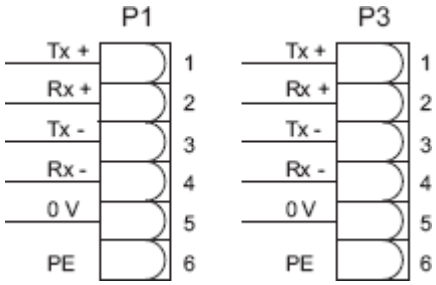

- Tx+ an Tx- connections: first pair of the cable;
- Rx+ an Rx- connections: second pair of the cable (RS422);
- O V connections: second pair of the cable (RS485) or third pair of the cable (RS422).PCB drawings and settings

9.6 Dongle

Copyright ©2008—2026 ADB SAFEGATE, All Rights Reserved

9.6.1 Dip-switches

The dip-switch bank is used to set the communication speed parameters. Set the switches to 10101010 if this is not the case. In the configuration menu of the software, choose the used COM port on the PC, '38400' bd & 'EVEN' parity. This will allow proper communication between FCU/ LMC and the dongle.

9.6.2 LEDs

LED	Indication	Status	Notes
DS1	TxD to PC	Normally OFF. Lights up momentarily during transmission or reception.	If one of these LEDs is permanently OFF, there is no traffic on the corresponding bus.
DS2	RxD from PC		If one of these LEDs is permanently ON, there may be polarity inversion on the bus
DS5	Isolated supply for communication		
DS7	RUN	One flash per second.	
DS8	TxD to flasher system	Normally OFF. Lights up momentarily during transmission or reception.	If one of these LEDs is permanently OFF, there is no traffic on the corresponding bus.
DS9	RxD from flasher system		If one of these LEDs is permanently ON, there may be polarity inversion on the bus

9.7 Wiring Diagrams

FCU-1

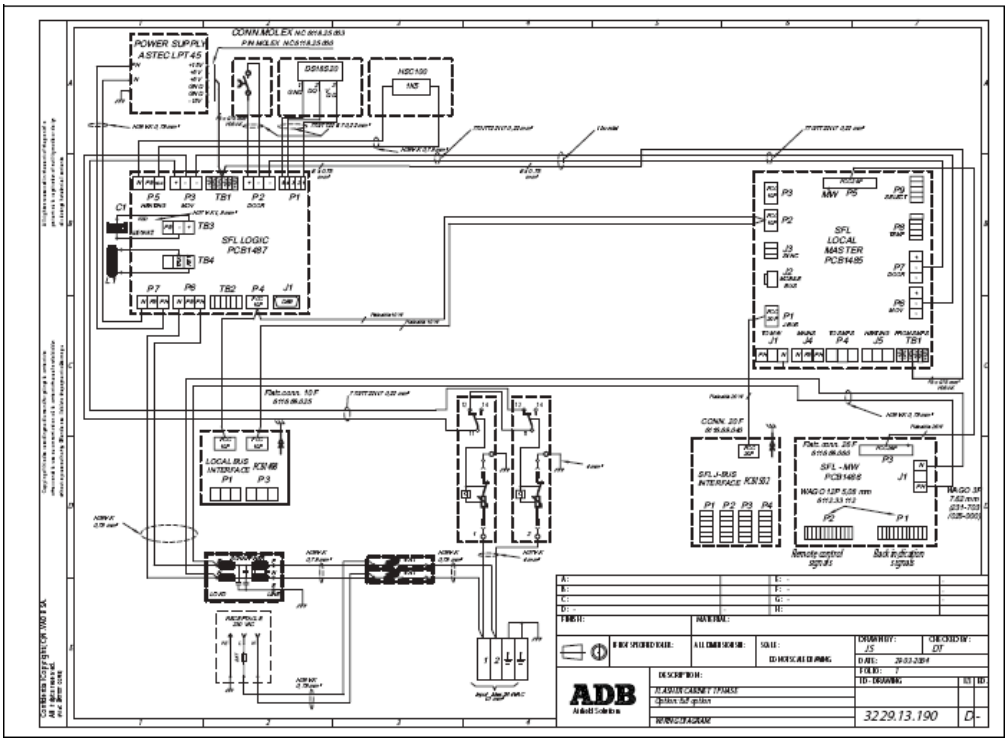

FCU-3

Copyright ©2008—2026 ADB SAFEGATE, All Rights Reserved

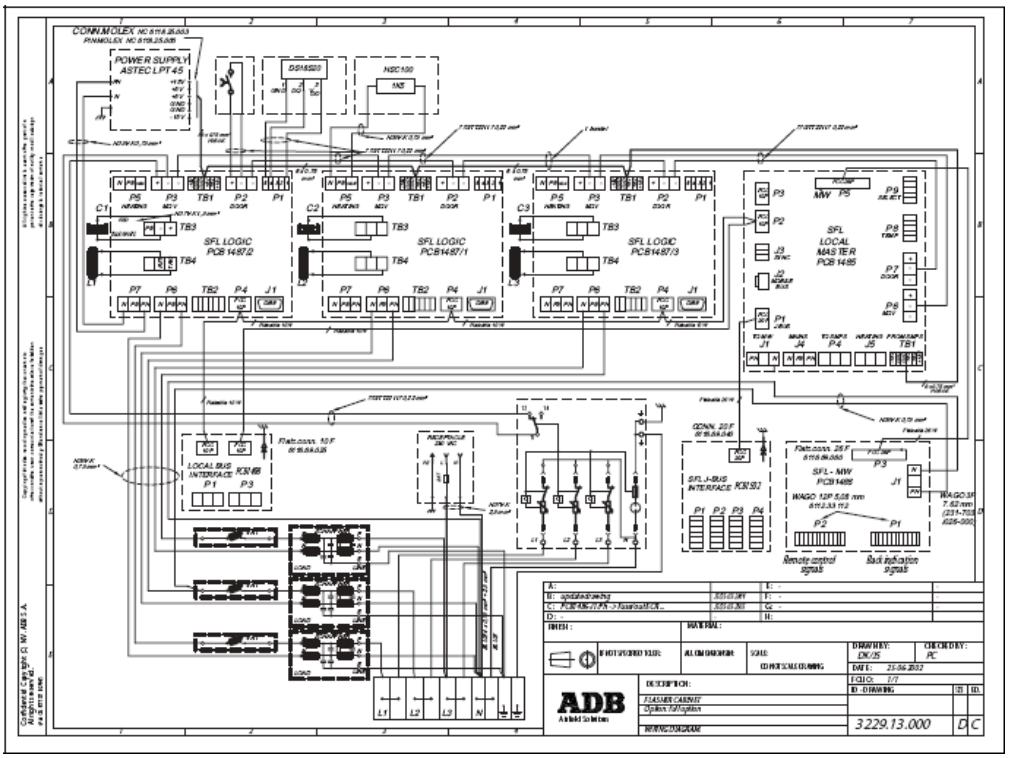

Copyright ©2008—2026 ADB SAFEGATE, All Rights Reserved

10.0 Technical Data

10.1 Technical Characteristics

Table 52: Technical characteristics

Item	FCU-1	FCU-3
Rated frequencies [Hz]	50 / 60 (± 5 %)	
Input voltage range: Nominal [V] Minimum [V]	230 - 240 3P + N 195 V 3P + N (or 1P + N)	
Minimum power supply [V]	A minimum power supply of 190 V is recommended to allow for 10 % voltage fluctuations.	
Power consumption [VA]	230- 250 at the highest brightness step, at two flashes per second, without heating	
Current for cable sizing [A]	1.5 (maximum)	
Remote control and monitoring	Multiwire, industrial field bus (J-Bus) or the two combined	
Dimensions (width x depth x height) [mm] (inc. sun roof and base)	420 x 235 x 520	790 x 340 x 650
Weight [kg]	19.4	47

10.2 Ambient Conditions

Table 53: Ambient conditions

Item	Description
Temperature	From -20 up to 55 °C
Altitude	From 0 (sea level) up to 1000 meters
Relative humidity	From 10 % RH up to 95 % RH without dewing

10.3 Parts List

10.3.1 General

WARNING

Use only original ADB spare parts.

If you use other spare parts, the specific module or the equipment may be damaged. This can also put the personnel in danger.

Copyright ©2008—2026 ADB SAFEGATE, All Rights Reserved

Each part of the equipment has a part number. When you order parts:

- Always mention the part number of the ordered part;
- Always mention serial number and type of the equipment. These are indicated on the nameplate of the equipment.

  For all spare part orders, contact ADB or our local representative.

  Recommendations

  To reduce downtime during maintenance, have one or more extra equipment cabinets in stand- by at the substation. This is especially important at major airports, which have a large amount or equipments.

  Keep spare parts always in stock. For example:
- Fuses;
- Lightning arrestors;
- PCBs;
- Terminals;
- Connectors;
- Fused switches.

10.3.2 General Parts

Description	Part No.	New Part No.	Quantity per order
PCB1487: Main electronic board	1590.03.466		1
Capacitor 1200 µF +30 / -10% / 415 V	6323.61.120	SP.011377	1
Power supply module with housing	6341.80.230	SP.011960	1
Door micro-switch	6150.49.010		1
Main power phase terminal 16 mm^2	6112.45.170		10
Main power neutral terminal 16 mm^2	6112.45.175		10
Earth terminal	6112.45.007		10
Screw terminal connector PC 6/6 - ST-10.16, for the cable between the fitting and the FCU	6112.32.440		10
Spring clamp terminal box 12-pole	6112.33.112		10
Spring clamp terminal box 6-pole	6112.32.518		10
Cage clamp 3-pole 5.08 for the local bus connection	6112.32.508		10
Fuse T4A HBC DIA 6.3 L 32 (slow blow)	6130.37.180		10
PCB1498: Local J-Bus connection board	1590.03.480	SP1590.03.481	10
Wiring assembly for 1-in-1 cabinet	1440.20.040		1
Wiring assembly for 3-in-1 cabinet	1440.20.060		1
Cable entry kit with a bottom for the 1-in-1 cabinet	4072.01.530		1
Empty 1-in-1 cabinet	4071.98.260		1
Empty 3-in-1 cabinet	4071.98.010		1
Choke 1,5 mH 150 A	6166.50.150		1
Heater resistance 1K5 100 W	6310.51.620		1
Mains filter FN2070-3/06	6115.18.020		1

Copyright ©2008—2026 ADB SAFEGATE, All Rights Reserved

10.3.3 LMC and Remote Control Parts

Description	Part number	Quantity per order
LMC local master board without Modbus	1440.21.100	1
LMC local master board with single Modbus	1440.21.110	1
PCB1485: LMC local master board with dual Modbus	1593.13.412	1
PCB1486.1: 24 V DC multiwire remote control interface	1593.13.511	1
PCB1486.1: 48 V DC multiwire remote control interface	1593.13.521	1
Flat cable 20-wires for multiwire	3229.13.030	1
Flat cable 20-wires for J-bus	3229.13.020	1
PCB1502: J-Bus interface (1590.03.490)	SP1590.03.491	1
Temperature sensor	1440.21.000	1

10.3.4 Optional Parts

Description	Part number	Quantity per order
Mounting system for FCU1 and UEL, including: ▪ Mounting flange; ▪ Tube 60 mm OD, 800 mm high; ▪ Flexible conduit; ▪ Nipple for flexible conduit.	1440.20.200	1
Three-phase TN and TT earthing systems over-voltage protection. Complete block assembly with supply phase and neutral cartridges (VAL-MS 230/3+1FM). Included with FCU3 with over-voltage option.	6134.03.040[1]	1
Single-phase TN, TT, and IT earthing systems over-voltage protection cartridge for supply phase and neutral (VAL-MS 230 IT ST). Included with FCU1 with over-voltage protection option.	6134.03.080	1

[1] For three-phase IT earthing systems over-voltage protection, replace all supply and neutral cartridges with 6134.03.080 (VAL-MS 230 IT ST).

Copyright ©2008—2026 ADB SAFEGATE, All Rights Reserved

Copyright ©2008—2026 ADB SAFEGATE, All Rights Reserved

Appendix A: Support

Your airport needs fast, reliable support when technical issues affect operations. ADB SAFEGATE provides 24/7 phone support by experienced technical service and support teams to help you troubleshoot issues and reduce disruption.

For general product information, solutions and more, visit the ADB SAFEGATE website, www.adbsafegate.com.

Global Technical Service & Support

For support in Europe, the Middle East, Africa and Asia Pacific, contact ADB SAFEGATE's technical support specialists. Trained in all areas of system issues, troubleshooting, quality control and technical assistance, our highly experienced Technical support specialists offers 24/7 phone support.

- Europe: **+32-2-722-17-11**
- China: **+86-10-8476-0106**
- Middle East and Africa: **+971-4-452-7575**

Live Technical Support – Americas

For support in the Americas, contact ADB SAFEGATE's U.S.-based technical support specialists. The team provides support for airfield lighting products, power and control systems, weather systems, and Safedock A-VDGS.

Phone support is available 24/7.

- United States: **+1-800-545-4157**
- Canada: **+1-905-631-1597**

You can also reach the Americas support team by email during regular business hours:

- Airfield Technical Service: techservice.us@adbsafegate.com
- Apron (previously Gate) Technical Service: gateservice.us@adbsafegate.com
- Weather Customer Service: CustomerServiceWeather@adbsafegate.com

Before You Call

Help us resolve your issue faster by having the right information ready before you contact Technical Support.

For Airfield Lighting, Control Systems, and Weather Product Issues

Please review the following before calling:

- Review the product manual and troubleshooting guide.
- Be near the product and ready to troubleshoot.
- Have a True RMS Multimeter available, along with any other necessary tools.
- Have the following information ready:
  - Airport code
  - Company name, phone number, and email address
  - Product number or part number, if available

For Safedock A-VDGS Issues

Please collect the following information before calling:

- Gate number
- Flight number
- Aircraft type
- Time of the event
- Description of the issue
- Any actions already taken to resolve the issue
- CCTV footage of the incident, if available, to help align the event with the Safedock log file

Copyright ©2008—2026 ADB SAFEGATE, All Rights Reserved

A.1 ADB SAFEGATE Website

The ADB SAFEGATE website, www.adbsafegate.com, offers information regarding our airport solutions, products, company, news, links, downloads, references, contacts and more.

Copyright ©2008—2026 ADB SAFEGATE, All Rights Reserved

A.2 Recycling

A.2.1 Local Authority Recycling

The disposal of ADB SAFEGATE products is to be made at an applicable collection point for the recycling of electrical and electronic equipment. The correct disposal of equipment prevents any potential negative consequences for the environment and human health, which could otherwise be caused by inappropriate waste handling. The recycling of materials helps to conserve natural resources. For more detailed information about recycling of products, contact your local authority city office.

A.2.2 ADB SAFEGATE Recycling

ADB SAFEGATE is fully committed to environmentally-conscious manufacturing with strict monitoring of our own processes as well as supplier components and sub-contractor operations. ADB SAFEGATE offers a recycling program for our products to all customers worldwide, whether or not the products were sold within the European Union (EU).

ADB SAFEGATE products and/or specific electrical and electronic component parts which are fully removed/separated from any customer equipment and returned will be accepted for our recycling program.

All items returned must be clearly labeled as follows:

- For Restriction of Hazardous Substances (*RoHS*)/Waste Electrical and Electronic Equipment (*WEEE*) Recycling
- Sender contact information (Name, Business Address, Phone number).
- Main Unit Serial Number.

ADB SAFEGATE will continue to monitor and update according for any future requirements for *EU directives* as and when *EU member states* implement new *regulations* and or *amendments*. It is our aim to maintain our *compliance plan* and assist our customers.

Copyright ©2008—2026 ADB SAFEGATE, All Rights Reserved

Copyright ©2008—2026 ADB SAFEGATE, All Rights Reserved

Company Addresses

ADB SAFEGATE, Belgium	ADB SAFEGATE BV Leuvensesteenweg 585 B-1930 Zaventem Belgium
Contact: Tel.: +32 2 722 17 11 Fax: +32 2 722 17 64	 Email: marketing@adbsafegate.com Internet: www.adbsafegate.com
ADB SAFEGATE, Americas	ADB SAFEGATE Americas, LLC 700 Science Blvd Gahanna, OH 43230 USA
	ADB SAFEGATE Americas, LLC (Weather BL) 1065 National Dr., Suite 1 Sacramento, CA 95834 USA
Contact: Tel.: +1 (614) 861 1304 Fax: +1 (614) 864 2069	 Email:sales.us@adbsafegate.com Internet: www.adbsafegate.com
ADB SAFEGATE, Sweden	ADB SAFEGATE Sweden AB Djurhagegatan 19 SE-213 76 Malmö Sweden
Contact: Tel.: +46 (0)40 699 17 00 Fax: +46 (0)40 699 17 30	 Email: marketing@adbsafegate.com Internet: www.adbsafegate.com
ADB SAFEGATE, China	ADB SAFEGATE Airfield Technologies Ltd. China Unit 603, D Block, CAMIC International Convention Center, No 3, Hua Jia Di East road, ChaoYang district, Beijing 100102 P.R. China
Contact: Tel.: +86 (10) 8476 0106 Fax: +86 (10) 8476 0090	 Email: china@safegate.com Internet: www.adbsafegate.com
ADB SAFEGATE, Germany	ADB SAFEGATE Germany GmbH Konrad-Zuse-Ring 6, D-68163 Mannheim Germany
Contact: Tel.: +49 (621) 87 55 76-0 Fax: +49 (621) 87 55 76-55	 Email: marketing@adbsafegate.com Internet: www.adbsafegate.com

Copyright ©2008—2026 ADB SAFEGATE, All Rights Reserved

Empowering the Airside Evolution

WWW.ADBSAFEGATE.COM

SMARTER. BETTER. NOW.

ADB SAFEGATE

Copyright ©2008—2026 ADB SAFEGATE, All Rights Reserved