General specifications	
Spa weight (empty)	1.150 Kg
Spa weight (full)	7.150 Kg

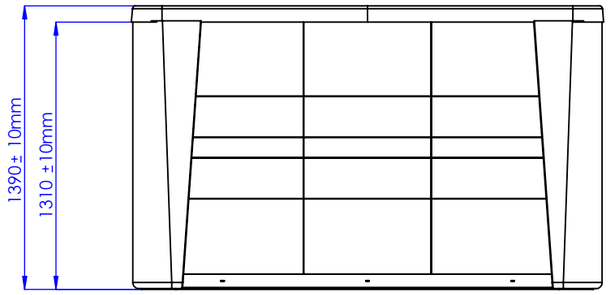

DRAIN

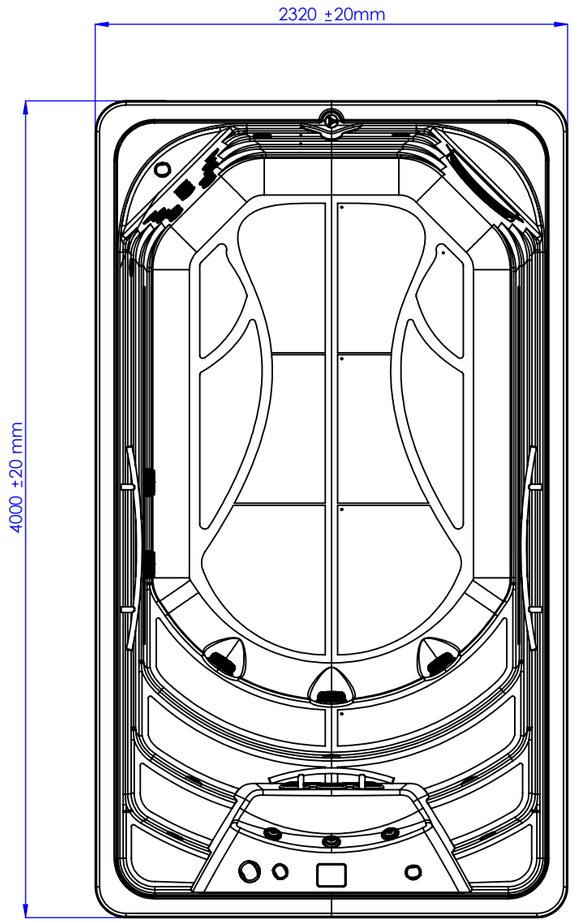

DRAIN

ELECTRICAL BOARD CONNECTIONS ACCESS

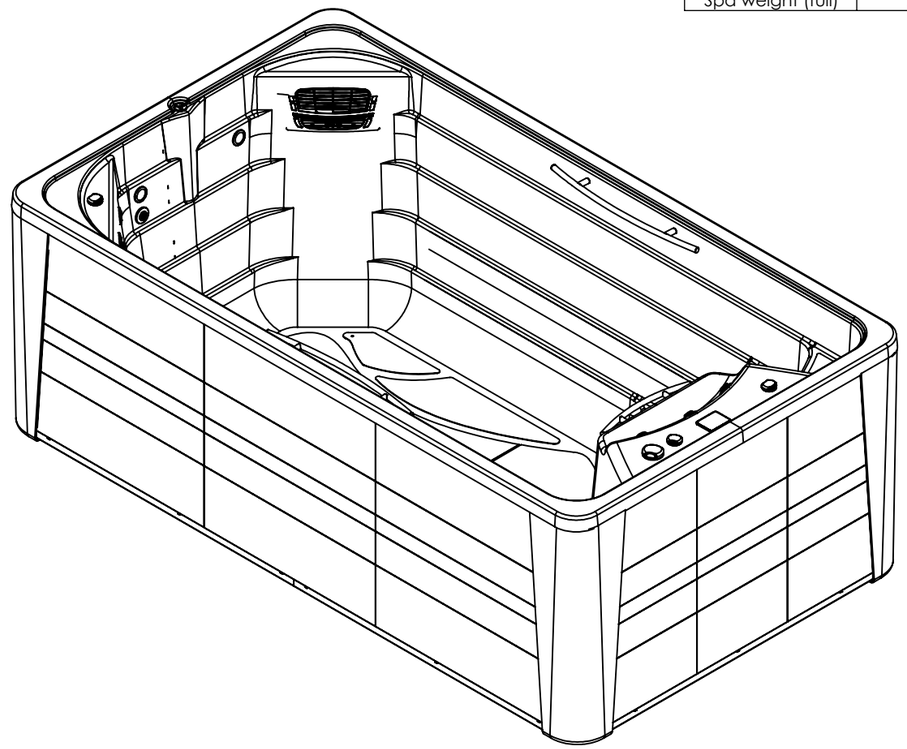

Inground option

WARNING:
It's essential to keep a minimum clearance access of **700mm** all around.

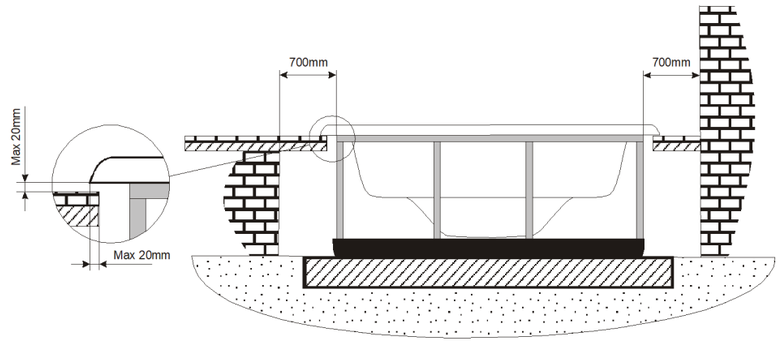

According to our policy of continuous improvement, dimensions, features or components of this product can be partially or completely changedwithout prior notice.
It's Customer responsibility to verify that this is the last version of the drawing

Change No.	Date	Name	Modification
03	25/04/2021	CF	New design 2021
02	03/12/2018	D.Castillo	Spa weight added.
01	04/10/2018	A.Miquel	Jets (CMP) changed.

Remarks
Dimensions in mm. General Tolerances +/- 10mm

COMMERCIAL

Drawn	20/03/2017	O. Faura
Checked	20/03/2017	V. Saiz
Scale 1:30	General Tolerance DIN 7168 ISO 2768g	
Sheet 1/2		

ASTRALPOOL

Part Number	Rev.	First Angle Projection
69128	03	

Property of IBERSPA S.L. Avda. Plà d'Urgell 2-8 25200 Cervera, Spain. Don't use without permission. Keep this information confidential and use it solely for the permitted purpose.