SYMBOL DEFINITION		
Z DIMENSION WITHOUT AN INSPECTION REPORT SYMBOL, DOES NOT REQUIRE INSPECTION. IT MAY BE CONTROLLED ON THE INDIVIDUAL COMPONENT DRAWING.	TOTAL NO OF INSPECTIONS REQUIRED	46
	LOT NO. SIZE	20

MISSING SYMBOLS
NO MISSING SYMBOL NUMBER

	REV	ECN		DATE	REVISION HISTORY	INITIAL	DATE
SHEET 1	A	02			2SJA4003 - MAN.INTERCHN , REVISED AND RELEASED PART DRAWING	KTY/MT	2001/08/24
SHEET 1	B	02			2SJA4003 - UPDATED MATERIAL RECYCLING CODE/ LOGO AND ADDED "ROHS"!!!	KBM/KT	2001/09/24
SHEET 1	B	03			2SJA4003 - ADDED DIM NOTE TO DIM 39, ADDED DIM NOTE TO DIM 6, UPDATED NOTE 2 NOT REPEATED	KZ/KZ	2001/10/04
SHEET 1	B	04			2SJA4003 - UPDATED COMPONENT NAME	KAA/KZ	2001/10/24
SHEET 1	B	05			2SJA4003 - RELEASED	KAA/KZ	2002/01/04

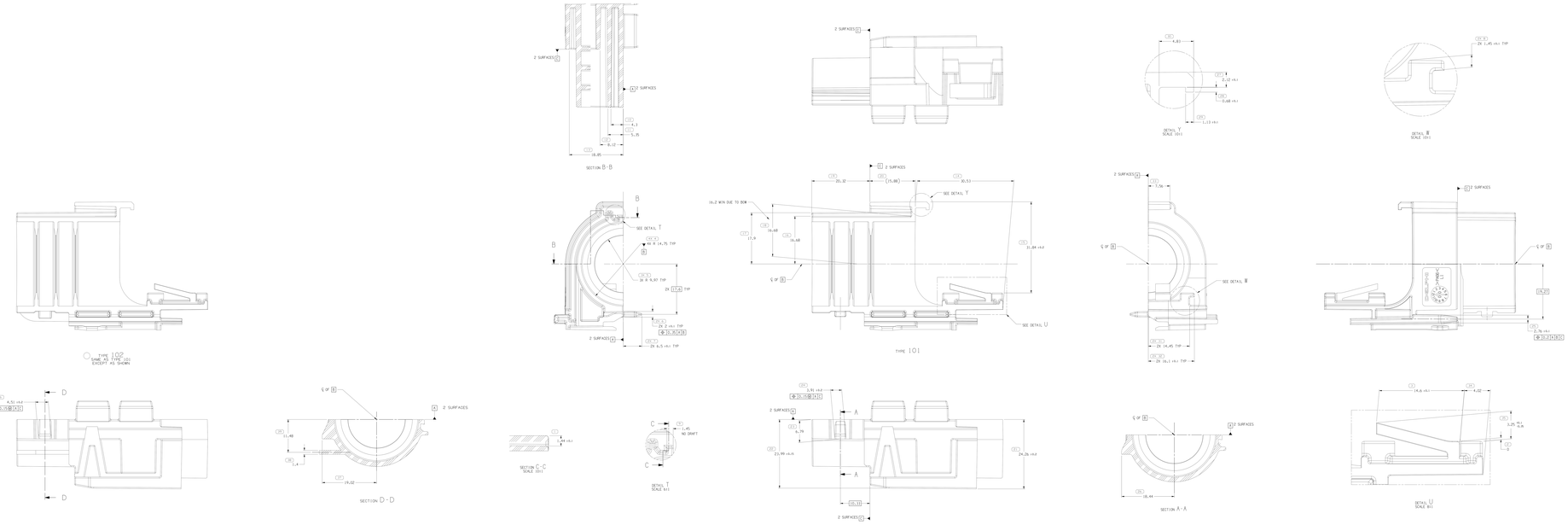

NOTES

1. UNLESS OTHERWISE SPECIFIED AND/OR INDICATED:
   DIMENSIONS ARE TO FACE OF VIEW SHOWN AND INCLUDE ALLOWANCE FOR SHRINKAGE AND DEPRESSION FOR MATCH MODEL FOR PRECISE DIMENSIONS, FOR ALL OTHER DIMENSIONS NOT SHOWN BUT REQUIRED FOR TOOL BUILD, SEE MATCH MODEL FOR PRECISE TOOL PATH DATA.
2. REFERENCE MATING COMPONENTS OR EQUIVALENT
   COVER TPN 25241.B4
3. MATERIAL RECYCLING CODE PER ISO 11469, 11410-21 CHARACTERS AS SHOWN TO BE LOCATED ON ANY EXTERIOR SURFACE.
4. CORPORATE BRAND TO BE APPLIED TO PRODUCT DESIGN PER THE LATEST REVISION OF ESD 5180D01.
5. THIS PRODUCT IS NOT CATEGORIZED AS AN APPEARANCE ITEM. MINOR SURFACE DEFECTS, SUCH AS SINK, FLOW LINES, WELD LINES, MINOR DEPRESSIONS, SPOT DEFECTS, AND SOFT FLASH THAT DO NOT AFFECT THE FIT, FORM, OR FUNCTION OF THE PART ARE PERMISSIBLE PER EMMP.4.1.01.01.ZN.
6. ALLOWANCE CHART USED ONLY FOR PARTS MOLDED ON TOOL PNLC 1110-0369.MM/WKMA.

2SJA4003	1	1	1U	HOLYMER COMPOUND BLACK	(V-0)B8000A1	15	13.1/0		2SJA4003
2SJA4003	1	1	1U	HOLYMER COMPOUND BLACK	(V-0)B8000A1	15	13.1/0		2SJA4003
PART NO	REV	N/P	TYPE	MATERIAL SPECIFICATION AND COLOR	CONSULT SIZE: MM1	CODE	VOLUME (CM³)		INITIAL PART NO

25	3.25	+0.15/-0.25	
25	2.76	+0.1	⊕ ⌀0.25 Ⓜ Ⓢ
18	16.68	+0.15/-0.4	
17	17.9	+0.2/-0.15	
16	16.68	+0.2/-0.15	
6	2	+0.1	⊕ ⌀0.25 Ⓜ Ⓢ
SYMBOL SIZ	DIM	SIZE TOL	CHART

ALLOWANCE CHART ONLY FOR SINGLE CAVITY TOOL PNLC 1110-0369.MM/WKMA

SEE NOTE #6

PROPRIETARY INFORMATION: THIS DOCUMENT CONTAINS PROPRIETARY INFORMATION OF APTIV. ACCEPTANCE OF THIS DOCUMENT IS ACKNOWLEDGMENT THAT THE INFORMATION CONTAINED HEREIN IS TO BE KEPT IN STRICT CONFIDENCE AND SHALL NOT BE REPRODUCED OR DISCLOSED TO OTHERS, IN WHOLE OR IN PART, WITHOUT THE EXPRESS WRITTEN CONSENT OF APTIV.	·APTIV· CONNECTION SYSTEMS
PROPRIETARY INFORMATION: THIS DOCUMENT CONTAINS PROPRIETARY INFORMATION OF DELPHI AUTOMOTIVE SYSTEMS. ACCEPTANCE OF THIS DOCUMENT IS ACKNOWLEDGMENT THAT THE INFORMATION CONTAINED HEREIN IS TO BE KEPT IN STRICT CONFIDENCE AND SHALL NOT BE REPRODUCED OR DISCLOSED TO OTHERS, IN WHOLE OR IN PART, WITHOUT THE EXPRESS WRITTEN CONSENT OF DELPHI AUTOMOTIVE SYSTEMS.	
PART DRAWING	
SIZE: SEE CHART	D
UNLESS OTHERWISE SPECIFIED	
DIMENSIONS ARE IN MILLIMETERS. DIMENSIONS ARE TO FACE OF VIEW SHOWN AND INCLUDE ALLOWANCE FOR SHRINKAGE AND DEPRESSION FOR MATCH MODEL FOR PRECISE DIMENSIONS, FOR ALL OTHER DIMENSIONS NOT SHOWN BUT REQUIRED FOR TOOL BUILD, SEE MATCH MODEL FOR PRECISE TOOL PATH DATA.	
DIMENSIONS ARE IN MILLIMETERS	
THIRD ANGLE PROJECTION	SCALE: SEE NOTE
DO NOT SCALE DRAWING	
DRAWING TYPE: PART DRAWING	
DRAWING NUMBER: 3511764	
CREATED: 2001/08/24 KTY/MT	
LAST MODIFIED: 2002/01/04 KAA/KZ	
DELPHI AUTOMOTIVE SYSTEMS	
SIZE	DRAWING NUMBER
A/A3	3511764
SHEET 1 OF 1	

PROPRIETARY INFORMATION: THIS DOCUMENT CONTAINS PROPRIETARY INFORMATION OF APTIV. ACCEPTANCE OF THIS DOCUMENT IS ACKNOWLEDGMENT THAT THE INFORMATION CONTAINED HEREIN IS TO BE KEPT IN STRICT CONFIDENCE AND SHALL NOT BE REPRODUCED OR DISCLOSED TO OTHERS, IN WHOLE OR IN PART, WITHOUT THE EXPRESS WRITTEN CONSENT OF APTIV.	·APTIV· CONNECTION SYSTEMS
PROPRIETARY INFORMATION: THIS DOCUMENT CONTAINS PROPRIETARY INFORMATION OF DELPHI AUTOMOTIVE SYSTEMS. ACCEPTANCE OF THIS DOCUMENT IS ACKNOWLEDGMENT THAT THE INFORMATION CONTAINED HEREIN IS TO BE KEPT IN STRICT CONFIDENCE AND SHALL NOT BE REPRODUCED OR DISCLOSED TO OTHERS, IN WHOLE OR IN PART, WITHOUT THE EXPRESS WRITTEN CONSENT OF DELPHI AUTOMOTIVE SYSTEMS.	
PART DRAWING	
SIZE: SEE CHART	D
UNLESS OTHERWISE SPECIFIED	
DIMENSIONS ARE IN MILLIMETERS. DIMENSIONS ARE TO FACE OF VIEW SHOWN AND INCLUDE ALLOWANCE FOR SHRINKAGE AND DEPRESSION FOR MATCH MODEL FOR PRECISE DIMENSIONS, FOR ALL OTHER DIMENSIONS NOT SHOWN BUT REQUIRED FOR TOOL BUILD, SEE MATCH MODEL FOR PRECISE TOOL PATH DATA.	
DIMENSIONS ARE IN MILLIMETERS	
THIRD ANGLE PROJECTION	SCALE: SEE NOTE
DO NOT SCALE DRAWING	
DRAWING TYPE: PART DRAWING	
DRAWING NUMBER: 3511764	
CREATED: 2001/08/24 KTY/MT	
LAST MODIFIED: 2002/01/04 KAA/KZ	
DELPHI AUTOMOTIVE SYSTEMS	
SIZE	DRAWING NUMBER
A/A3	3511764
SHEET 1 OF 1	

CAGE CODE	DRAWING NUMBER	REV
2SJA4003	3511764	B
2SJA4003	3511764	B
2SJA4003	3511764	B
2SJA4003	3511764	B
2SJA4003	3511764	B
2SJA4003	3511764	B
2SJA4003	3511764	B
2SJA4003	3511764	B
2SJA4003	3511764	B
2SJA4003	3511764	B
2SJA4003	3511764	B
2SJA4003	3511764	B
2SJA4003	3511764	B
2SJA4003	3511764	B
2SJA4003	3511764	B
2SJA4003	3511764	B
2SJA4003	3511764	B
2SJA4003	3511764	B
2SJA4003	3511764	B
2SJA4003	3511764	B
2SJA4003	3511764	B
2SJA4003	3511764	B
2SJA4003	3511764	B
2SJA4003	3511764	B
2SJA4003	3511764	B
2SJA4003	3511764	B