| SYMBOL DEFINITION | | |
|---|---|---|
| A DIMENSION WITHOUT AN INSPECTION REPORT SYMBOL ( ) DOES NOT REQUIRE INSPECTION. IT MAY BE CONTROLLED ON THE INDIVIDUAL COMPONENT DRAWING. | TOTAL NO OF INSPECTIONS REQUIRED | 19 |
| | LAST NO. USED | 19 |

| MISSING SYMBOLS |
|---|
| NO MISSING SYMBOL NUMBER |

| DWG STATUS | | | | | ZONE | REVISION HISTORY | AUTH | DR | APVD 1 | APVD 2 |
|---|---|---|---|---|---|---|---|---|---|---|
| DATE | STG | REV | N/P | CHG | | | | | | |
| 13MY02 | R | 03 | - | - | | REDRAWN TO PD, MAT'L SPEC WAS R00637B5 AND ADDED NOTES (2 PLCS) | 225J07 | JYD | EGR | RC |

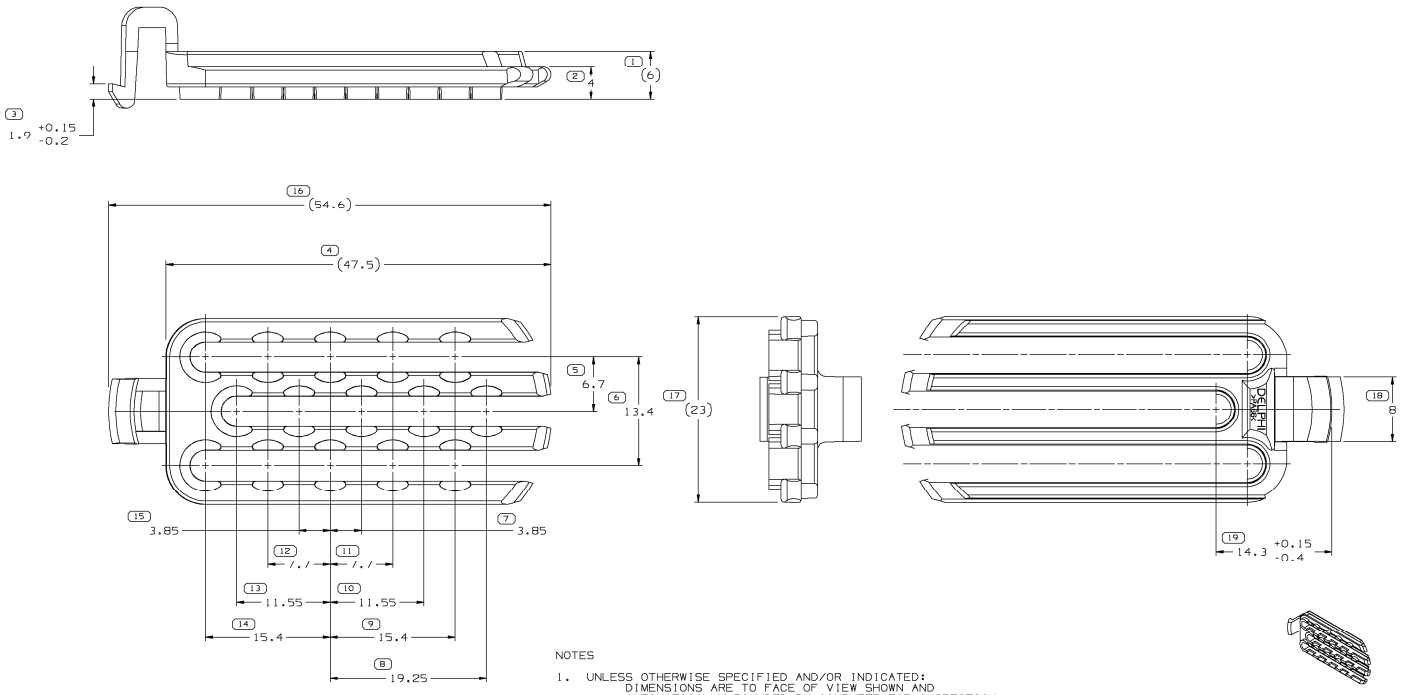


NOTES

1. UNLESS OTHERWISE SPECIFIED AND/OR INDICATED:
   DIMENSIONS ARE TO FACE OF VIEW SHOWN AND AUTOMATICALLY ROUNDED BY COMPUTER FOR INSPECTION (SEE MATH MODEL FOR PRECISE DIMENSIONS). FOR ALL OTHER DIMENSIONS NOT SHOWN BUT REQUIRED FOR TOOL BUILD, SEE MATH MODEL FOR PRECISE TOOL PATH DATA.

2. MATERIAL RECYCLING CODE >PA66< PER SAE J1344. (2)X(0.1) RAISED CHARACTERS AS SHOWN TO BE LOCATED ON ANY EXTERIOR SURFACE. OPTIONAL CONSTRUCTION TO BE NO MATERIAL RECYCLING CODE.

3. MATING COMPONENTS OR EQUIVALENT:
   CONNECTOR 12161187
   MAXIMUM CABLE DIAMETER THAT WILL FIT PART IS 2.4

4. (2)X(0.1) RAISED DELPHI CORPORATE BRAND TO BE LOCATED ON ANY EXTERIOR SURFACE, PREFERABLY VISIBLE AT FINAL ASSEMBLY. OPTIONAL CONSTRUCTION TO BE "PED" OR NO LOGO.



R 0.1 MAX
R 0.2 MAX
SHARP CORNER TOLERANCE

| DIMENSIONAL RANGE (MM) | | | | | | | | | | |
|---|---|---|---|---|---|---|---|---|---|---|
| FROM | > 0 | > 20 | > 30 | > 70 | >100 | >150 | >200 | >250 | >300 | CHAM E1 |
| TO | 20 | 30 | 70 | 100 | 150 | 200 | 250 | 300 | 400 | |
| TOLERANCE UNLESS OTHERWISE SPECIFIED | | | | | | | | | | |
| | ±0.15 | ±0.2 | ±0.3 | ±0.4 | ±0.5 | ±0.6 | ±0.8 | ±1 | ±1.2 | |

ANGULAR TOLERANCE ±2°

(3) PROCESS SENSITIVE DIMENSION

DIMENSIONS ENCLOSED IN ( ) INDICATE REFERENCE DIMENSIONS AND NO TOLERANCE LIMITS ARE ESTABLISHED

| | |
|---|---|
| DWG TYPE | PART DRAWING |
| STYLE | |
| VOLUME (CM³) | 2.531 |
| DISTR CODE | |
| ROUTING | 6901 |

UNLESS OTHERWISE SPECIFIED
THIS DOCUMENT IS IN ACCORDANCE WITH ASME Y14.5M-1994 AS AMENDED BY THE IMI GLOBAL DIMENSIONING AND TOLERANCING ADDENDUM - 1997. ALL GEOMETRIC TOLERANCES AND RELATED DATUMS APPLY REG. MALE #1(PERFECT FORM AT MMC) DOES NOT APPLY WHEN RELATIONSHIP BETWEEN FEATURES IS NOT CRITICAL. ALL DIMENSIONS ARE IN LOCATION TOLERANCES. SEPARATE POSITION CALLOUTS MAY BE GIVEN SEPARATELY, REGARDLESS OF DATUM REFERENCE.

REFERENCE

THIRD ANGLE PROJECTION

DO NOT SCALE
USE MATH DATA

DELPHI

DELPHI PACKARD ELECTRIC SYSTEMS
WARREN, OH

| | | DATE |
|---|---|---|
| DR | W. TURNBULL | 09MR95 |
| APVD1 | W. TURNBULL | 09MR95 |
| APVD2 | MANUEL VEGA | 20MR95 |
| APVD3 | G. DETTER | 28MR95 |
| APVD4 | | |
| APVD5 | | |

SUBSTANCES OF CONCERN AND RECYCLED CONTENT PER DELPHI 10949001

MATERIAL
M3592012 - PA66 IM HS GRA LT

DRAWING NAME
TPA M/P 280

DRAWING NUMBER
12176865

| SIZE | SCALE | FRAME NO | SHEET NO | STG | REV | N/P |
|---|---|---|---|---|---|---|
| A1 | 4:1 | 1 OF 1 | 1 OF 1 | R | 03 | - |