SYMBOL DEFINITION		
A DIMENSION WITHOUT AN INSPECTION REPORT SYMBOL (□) DOES NOT REQUIRE INSPECTION. IT MAY BE CONTROLLED ON THE INDIVIDUAL COMPONENT DRAWING.	TOTAL NO OF INSPECTIONS REQUIRED	17
	LAST NO. USED	14

MISSING SYMBOLS
NO MISSING SYMBOL NUMBER

DWG STATUS DATE	STS	REC	N/P	DIB	ZONE	REVISION HISTORY	AUTH	DR	APR1	APR2
28MR12	R	31	-	-		15395951 - WAS SEPARATE DRAWING & 13952704 - RELEASED.	410614	SJS	JRN	SJS
12DE12	R	32	-	-		15516389 - RELEASED	420787	JCF	JCF	DAB
15JA13	R	33	-	-		15516389 - UPDATED PART AVAILABILITY	421898	MF	JAA	DAB
22MY13	R	34	-	-		ALL PARTS - 19.5 +0.15/-0.2 WAS 19.5, 2X BLIEF +0.15/-0.22 WAS 2X BLIEF, 10.34 +0.21/-0.75 WAS 10.34 +0.15/-0.75, 18.2 +0.15/-0.41 WAS 18.2 AND 14.8 +0.15/-0.27 WAS 14.8	422692	JAR	JAR	DBR
10FE14	R	35	-	-		15516389 - UPDATED PART AVAILABILITY	479456	RM	RM	DAN
28AP17	R	36	-	-		ALL PARTS - UPDATED DESIGN & ENGINEERING CONTROL AND ADDED NOTE	436484	JAR	JAR	JRE

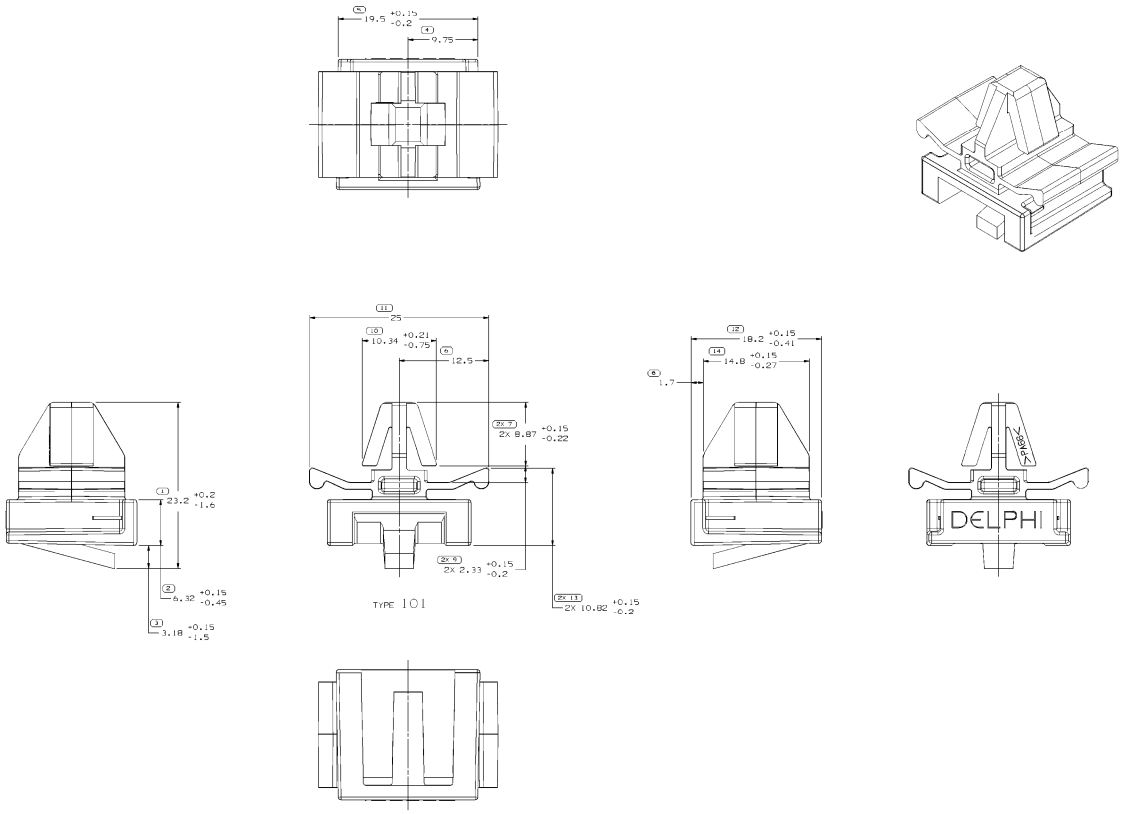

NOTES

1. UNLESS OTHERWISE SPECIFIED AND/OR INDICATED:
   DIMENSIONS ARE TO FACE OF VIEW SHOWN, AND AUTOMATICALLY ROUNDED BY COMPUTER FOR INSPECTION. (SEE MATH MODEL FOR PRECISE DIMENSIONS.) FOR ALL OTHER DIMENSIONS NOT SHOWN BUT REQUIRED FOR TOOL BUILD, SEE MATH MODEL FOR PRECISE TOOL PATH DATA.
2. THIS PART IS DESIGNED TO MOUNT ON BRACKET 15395201 OR EQUIVALENT.
3. MATING COMPONENTS OR EQUIVALENT :
   CONNECTOR - 15369350
4. PART TO FIT RECTANGULAR HOLE (B +0.2/-0) X (15 +0.2/-0) WITH STOCK THICKNESS OF 0.8 - 2 MM.

NOTES

5. THIS PRODUCT IS NOT CATEGORIZED AS AN APPEARANCE ITEM. MINOR IMPERFECTIONS INCLUDING, BUT NOT LIMITED TO, FLOW MARKS, COLOR BLEMISHES, GATE VESTIGE, AND SOFT FLASH THAT DO NOT AFFECT THE FIT, FORM, OR FUNCTION OF THE PART ARE PERMISSIBLE PER DPNP-4.7-C5-01.

THE DESIGN AND ENGINEERING CONTROL OF THESE COMPONENTS HAVE BEEN TRANSFERRED TO DELPHI/HELLERMANNTYTON

PART NO	REV	N/P	TYPE	MATERIAL SPECIFICATION AND COLOR	VOLUME
15516389	01	AD	101	POLYAMIDE COMPOUND GRAY	2.344
13947607	01	AB	102	POLYPROPYLENE IMPACT MODIFIED BLACK	2.344
15395951	03	AF	101	POLYAMIDE 66 BLACK	2.344

THE DRAWN TOLERANCE / FORM NUMBER INDICATES THAT PHYSICAL PARTS ARE NOT AVAILABLE FOR ORDERING.

PART NUMBERS THAT DO NOT HAVE A LINE PRESENT INDICATE THAT PHYSICAL PARTS ARE AVAILABLE FOR ORDERING.

CONTACT ENGINE SALES TO ASSURE AVAILABILITY OF PARTS.

DWG TYPE: PART DRAWING

STYLE:

VOLUME (CM³): SEE CHART

SCREW DWG:

UNLESS OTHERWISE SPECIFIED

THIS DOCUMENT IS IN ACCORDANCE WITH ISO/IEC 17025:2005 AND ISO 9001:2008 AND IS CONTROLLED UNDER THE DELPHI ENGINEERING MANUAL. DELIVERY FUTURE OF RETURNS KEY BY DHEO DEPARTMENT PROVIDED BY SYSTEM REFERENCE.

ALL DIMENSIONS ARE IN MILLIMETERS

C12 PROCESS INSPECTION STANDARDS: REFERENCE

DIMENSIONS ENCLOSED IN ( ) INDICATE REFERENCE DIMENSIONS. ALL OTHER TOLERANCES LISTED ARE DEVIATIONS.

DIMENSIONAL RANGE (MM)					CHART C
FROM	0	10	30	50	100
TO	10	30	50	100	1000
TOLERANCE	±0.200	±0.250	±0.300	±0.400	±0.500

INDUSTRY STANDARD ISO 8015:2005

FIRST ANGLE PROJECTION

THIRD ANGLE PROJECTION

DO NOT SCALE

USE MATH DATA

NX

DELPHI

DELPHI PROVIDO ELECTRICAL/ELECTRONIC ARCHITECTURE

COPYRIGHT 2012 DELPHI AUTOMOTIVE SYSTEMS LLC
ALL RIGHTS RESERVED.
THIS DRAWING IS THE PROPERTY OF DELPHI CORPORATION AND CONTAINS DETAILS CONFIDENTIAL INFORMATION. THIS DRAWING MUST NOT BE REPRODUCED IN WHOLE OR IN PART WITHOUT WRITTEN PERMISSION FROM DELPHI CORPORATION AND MUST BE RETURNED UPON REQUEST.

		DATE
DR		
APR1	SERGIO M JUAREZ	28MR12
APR2	JOSE RAUL VINEGAS	04APR12
APR3	SERGIO M JUAREZ	04APR12
APR4		
APR5		

SUBSTANCES OF CONCERN AND RECYCLED CONTENT PER DELPHI (REVISED)

MATERIAL: SEE CHART

DRAWING NAME: TAXI MOUN ATTCH CLIP ROSEBUD

DRAWING NUMBER: 13952704

SIZE	SCALE	FRAME NO	SHEET NO	ZONE	REV	N/P
AD	5:1	1 OF 1	1 OF 1	R	Db	-