SYMBOL DEFINITION		
A DIMENSION WITHOUT AN INSPECTION REPORT SYMBOL ( ) DOES NOT REQUIRE INSPECTION. IT MAY BE CONTROLLED ON THE INDIVIDUAL COMPONENT DRAWING.	TOTAL NO OF INSPECTIONS REQUIRED	12
	LAST NO. USED	10

MISSING SYMBOLS

NO MISSING SYMBOL NUMBER

DWG STATUS DATE	STG	REV	N/P	CHG	ZONE	REVISION HISTORY	AUTH	DR	APVD 1	APVD 2
16MR04	R	07	-	-		REDRAWN TO PART DRAWING AND MAT'L SPEC WAS R0063782	252894	CTR	JAA	EST
09FE05	R	07	AA	-		REVISED NOTE #2	264178	LEG	LEG	DB

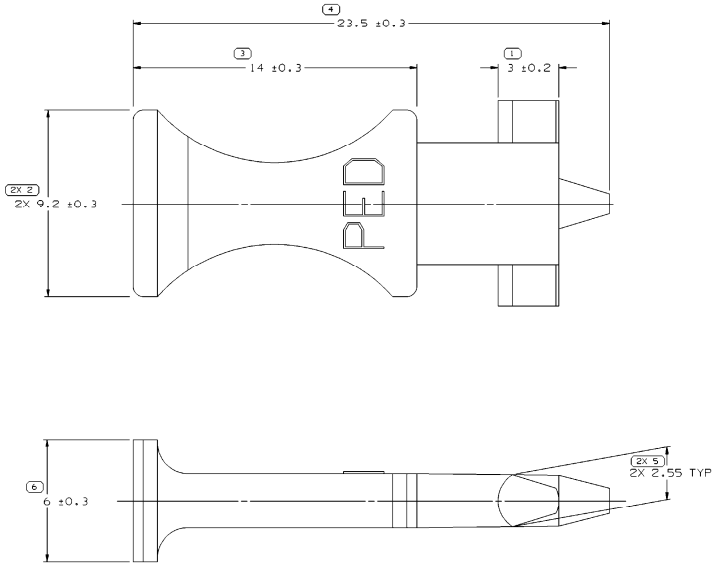

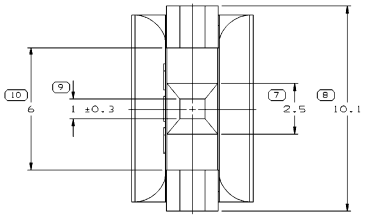

NOTES

1. UNLESS OTHERWISE SPECIFIED AND/OR INDICATED: DIMENSIONS ARE TO FACE OF VIEW SHOWN AND AUTOMATICALLY ROUNDED BY COMPUTER FOR INSPECTION (SEE MATH MODEL FOR PRECISE DIMENSIONS). FOR ALL OTHER DIMENSIONS NOT SHOWN BUT REQUIRED FOR TOOL BUILD, SEE MATH MODEL FOR PRECISE TOOL PATH DATA.
2. OPTIONAL: MATERIAL RECYCLING CODE PER ISO 11469.(2)X(0.1) CHARACTERS AS SHOWN TO BE LOCATED ON ANY EXTERIOR SURFACE.
3. THIS PART IS NOT CONTROLLED FOR AUTOMATIC FEEDING.
4. REFERENCE MATING COMPONENTS OR EQUIVALENT: CONNECTOR 12047898
5. (2)X(0.1) DELPHI CORPORATE BRAND TO BE LOCATED ON ANY EXTERIOR SURFACE, PREFERABLY VISIBLE AT FINAL ASSEMBLY. OPTIONAL CONSTRUCTION TO BE "PED".
6. APPLICATION NOTE : WHEN THIS CPA IS INSTALLED AND SHIPPED AS PART OF A WIRING HARNESS, IT MUST BE TAPED TO WIRES TO PREVENT DISLOCATION.

VIEW SCALE DOES NOT REFLECT ACTUAL PART SIZE

DIMENSIONAL RANGE (MM) FROM TO	> 0 20	> 20 30	> 30 70	> 70 100	>100 150	>150 200	>200 250	>250 300	>300 400
TOLERANCE UNLESS OTHERWISE SPECIFIED	±0.15	±0.2	±0.3	±0.4	±0.5	±0.6	±0.8	±1	±1.2
ANGULAR TOLERANCE ±2°									

CHART F1

(4) PROCESS SENSITIVE DIMENSION

REFERENCE

DIMENSIONS ENCLOSED IN ( ) INDICATE REFERENCE DIMENSIONS AND NO TOLERANCE LIMITS ARE ESTABLISHED

DWG TYPE: PART DRAWING

STYLE

VOLUME (CM³): 0.415

DISTR CODE

UNLESS OTHERWISE SPECIFIED

THIS DOCUMENT IS IN ACCORDANCE WITH ASME Y14.5M-1994 AS AMENDED BY THE GM GLOBAL DIMENSIONING AND TOLERANCING AGENDA: 2001. SEPARATE PATTERNS OF FEATURES MAY BE GAGED SEPARATELY REGARDLESS OF DATUM REFERENCES.

ALL DIMENSIONS ARE IN MILLIMETERS

THIRD ANGLE PROJECTION

DO NOT SCALE

USE MATH DATA

UGS UNIGRAPHICS

DELPHI

DELPHI PACKARD ELECTRIC SYSTEMS
WARREN, OH

		DATE
DR		
APVD1	CESAR A. TAPIA	16MR04
APVD2	J.S. ALVARADO	19MR04
APVD3	ERIC S. TRACEY	22MR04
APVD4		
APVD5		

SUBSTANCES OF CONCERN AND RECYCLED CONTENT PER DELPHI 10949001

MATERIAL
M2097005 PP IM ORN

DRAWING NAME
LOCK CPA AXIAL ORN

DRAWING NUMBER
12064989

SIZE	SCALE	FRAME NO	SHEET NO	STG	REV	N/P
A1	10:1	1 OF 1	1 OF 1	R	07	AA