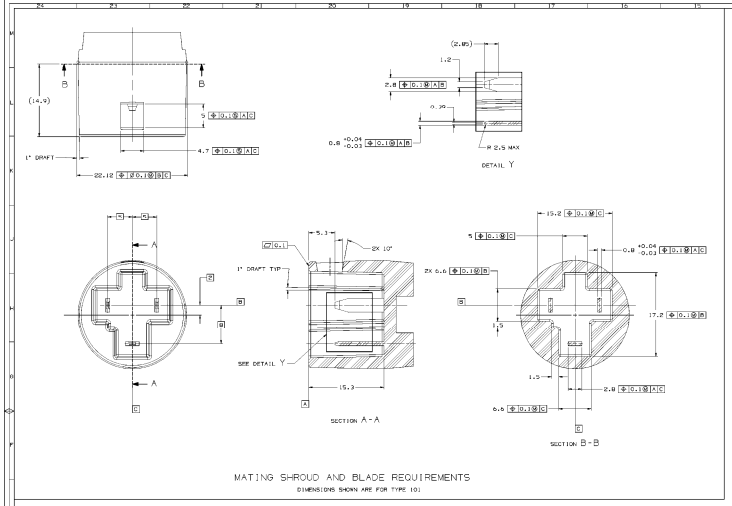

MATING SHROUD AND BLADE REQUIREMENTS

DIMENSIONS SHOWN ARE FOR TYPE 101

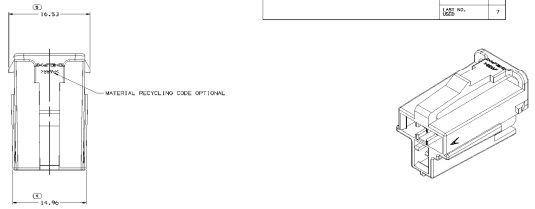

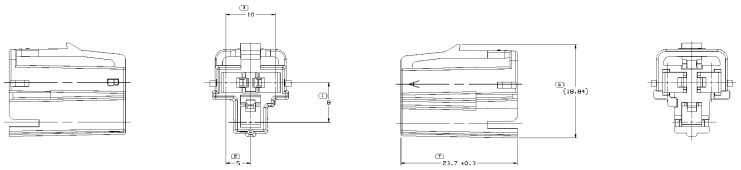

TYPE 101

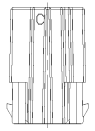

TYPE 102

SAME AS TYPE 101
EXCEPT AS SHOWN

TYPE 103

SAME AS TYPE 101
EXCEPT AS SHOWN

NOTES

1. UNLESS OTHERWISE SPECIFIED AND/OR INDICATED:

   DIMENSIONS ARE TO FACE OF VIEW SHOWN AND AUTOMATICALLY ROUNDED BY COMPUTER FOR INSPECTION PURPOSES. ALL DIMENSIONS ARE REQUIRED FOR TOOL BUILD, OTHER DIMENSIONS NOT SHOWN BUT REQUIRED FOR TOOL BUILD, SEE MATH MODEL FOR PRECISE TOOL PATH DATA.

2. MATERIAL RECYCLING CODE PER ISO 11469, (>3)(>0.1) CHARACTERS AS SHOWN TO BE LOCATED ON AN EASTERN SURFACE.

3. (±3.3)(±0.1) DELPHI CORPORATE BRAND TO BE LOCATED ON ANY EXTERNAL SURFACE VISIBLE AFTER INSTALLATION AT FINAL ASSEMBLY. OPTIONAL CONSTRUCTION TO BE ±0.5.

4. THIS PRODUCT IS NOT CATEGORIZED AS AN APPEARANCE ITEM. MINOR IMPERFECTIONS INCLUDING, BUT NOT LIMITED TO, FLOW MARKS, COLOR BLEMISHES, GATE VESTIGE, AND SOFT FLASH THAT DO NOT AFFECT THE FIT, FORM, OR FUNCTION OF THE PART ARE PERMISSIBLE PER NAM 4.10-1B.

5. FOR APPLICATION DATA SEE THE INDIVIDUAL APPLICATION DRAWINGS.

SYMBOL DEFINITION		
* A DIMENSION WITHOUT AN INSPECTION REPORT SYMBOL (*) DOES NOT REQUIRE INSPECTION. IT MAY BE CONTROLLED ON THE INDIVIDUAL COMPONENT DRAWING.	TOTAL NO OF INSPECTIONS REQUIRED	7
	LAST NO. USED	7

MISSING SYMBOLS

NO MISSING SYMBOLS NUMBER

REV STATUS								REVISION HISTORY				
DATE	CH	DR	CK	APP	CUST	CHK						
2MAR07	R	03	-	-	-	-	-	ALL PARTS - UPDATED PDM ATTRIBUTES	2DMAN	AVP	RVP	JC
14AUG07	R	04	-	-	-	-	-	ALL PARTS - UPDATED PDM ATTRIBUTES	23JTM	JVH	JDH	JC
17APR08	R	05	-	-	-	-	-	ALL PARTS - REVISED BRAVISIO	25JBM	JPE	JAW	RB
17MAR08	R	06	-	-	-	-	-	PER TR: 127MAT	17MAR	RJM	RJM	RB
21JUN	R	07	-	-	-	-	-	13/MAR/08 - UPDATED WITH CUSTOMER MAP DRAWING	26APR	JFV	FVV	FVV
05AUG	R	08	-	-	-	-	-	ALL PARTS - UPDATED PDM ATTRIBUTES	27APR	CCH	AJW	TM
29NOV	R	09	-	-	-	-	-	127MAR - ANTI SPEC RVR W/APPROVAL	29NOV	RTT	JJA	BSC
08NOV	T	10	-	-	-	-	-	ALL PARTS - CORR ATTRIBUTE (TIN NOTE 6 RECYCLING CODE LABEL, NOTES ADD'L CALLOUT TO REMOVE CALLOUT AND UPDATED PDM ATTRIBUTES	28ATJ	JTV	AJW	TM
08FEB07	T	11	-	-	-	-	-	08FEB07 - ADDED NEW DELPHI SAFTY WARE AND REMOVED PART ACCESS NOTE	14FAN	AJW	FVV	TM

121766B	03	AD	-	POLYAMIDE COMPOUND GRAY	102	.032
121766G	03	AE	-	POLYAMIDE COMPOUND BLACK	102	.032
121766F	04	AE	-	POLYAMIDE COMPOUND CREAM	101	.057
PART NO	REV	M/P	STATUS	MATERIAL SPECIFICATION AND COLOR	TYPE	VOL CAT

DRAWING NUMBER 1219164 3

DELPHI

DELPHI POWER ELECTRICAL/ELECTRONIC ARCHITECTURE
PANO, IN

PART DRAWING

SIZE A

NAME TAG
SEE CHART

DATE CODE

UNLESS OTHERWISE SPECIFIED

THIS DRAWING IS THE PROPERTY OF DELPHI AUTOMOTIVE SYSTEMS, LLC. IT IS LOANED IN CONFIDENCE AND MUST BE RETURNED UPON REQUEST. NO PART OF THIS DRAWING MAY BE REPRODUCED, DISTRIBUTED, OR DISCLOSED WITHOUT PRIOR WRITTEN PERMISSION. ANY REPRODUCTION OF THIS DRAWING MUST INCLUDE THIS LEGEND. ALL RIGHTS RESERVED. COPYRIGHT DELPHI AUTOMOTIVE SYSTEMS, LLC. 2007

DRAWN BY: PHIL BOYLES
DATE: 2007/07/17
REVISED BY: JOSEPH E. LUQUERE
DATE: 2008/05/05
REVISED BY: R. RAMOS
DATE: 2008/06/
REVISED BY: J. SUAREZ
DATE: 2008/06/

NOTE
SUBSTANCE OF CONTENT OR PROCESS CONTACT PATENTS (PHYSICS)

MATERIAL
SEE CHART

FINISH
PROCESS SPECIFICATION DRAWING
REVISION
SURFACE GRADE: 3 / SURFACE GRADE: 3

DIMENSIONAL CHECK BY
DATE
DIMENSIONAL CHECK BY
DATE
DIMENSIONAL CHECK BY
DATE