DRAWING NUMBER	H70001	REVISION	C1	SHEET	1/1	APPROVAL LEVEL	C1
DRAWING	-						

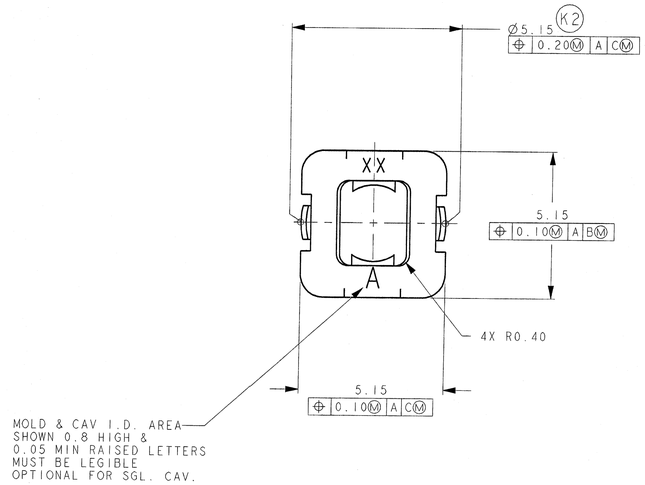

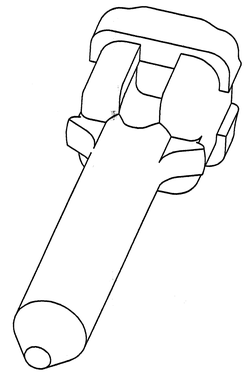

ACTUAL SIZE
VIEWS

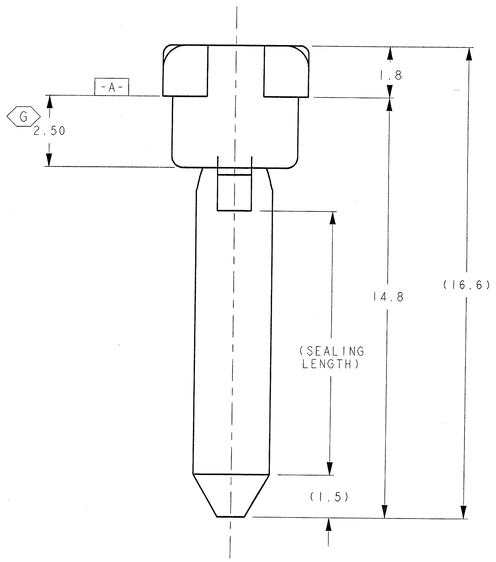

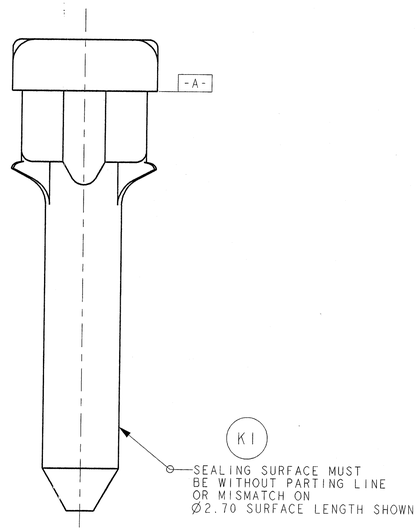

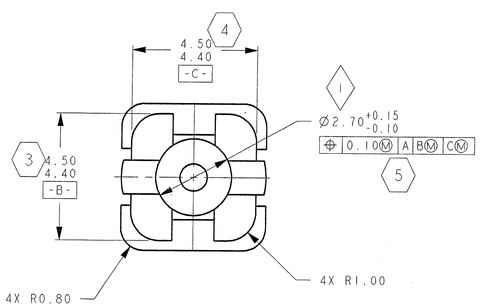

5	0.10Ⓜ A BⓂ CⓂ	0.50Ⓜ A BⓂ CⓂ
4	4.50/4.40	4.50/4.35
3	4.50/4.40	4.50/4.35
2	———	———
1	———	———
⬡	ORIGINAL DIM	ALLOWANCE DIM

ALLOWANCE CHART

QUALITY ASSURANCE REQUIREMENTS PER

ITEM 1 : 1 ◇ DIMENSIONAL OR PROCESS PARAMETERS PERMISSIBLE

(K) INDICATES IN-PROCESS INSPECTION FOR MANUFACTURING DIMENSION(S)OR SPECIFICATION(S)

VENDOR MUST SUBMIT FOR ENGINEERING APPROVAL, LOCATION AND TYPES OF PULLER RINGS, GATING, PARTING LINES AND EJECTION PRIOR TO CONSTRUCTION OF DIE

VENDOR MUST SUBMIT FOR ENGINEERING APPROVAL, LOCATION AND SIZE OF SUPPLIER I.D., MOLD & CAVITY I.D.

UNLESS OTHERWISE SPECIFIED TOLERANCE ON:
2 PLACE DIMENSIONS ±0.10
1 PLACE DIMENSIONS ±0.25
ANGULAR DIMENSIONS ±2°

DRAFT PERMISSIBLE WITHIN DIMENSIONAL TOLERANCE ONLY. UNLESS OTHERWISE SPECIFIED

R 0.25 MAX PERMISSIBLE ON CORNERS & FILLETS SHOWN AS SHARP.

PART TO BE MOLDED FREE FROM FLASH, VOIDS, STRESSES, IMPERFECTIONS, AND TOOL MARKS, THAT AFFECT FUNCTION, OR HANDLING OF THE PART

MATERIAL: PER MS-DB41 NYLON 66
15% G.F., H.S. & LUBRICATED
COLOR: LT. GREY

OPT. 1 DUPONT ZYTEL FE 5110
NC-10 BLENDED W/REED
COLOR CONCENTRATE

OPT. 2 BASF ULTRAMID
A3EG3 NATURAL
BLENDED WITH COLOR CONCENTRATE

(G) DENOTES GAGE REQUIREMENTS FOR USER & MANUFACTURER

MUST CONFORM TO THE FOLLOWING DCA STANDARDS:

1) PS-7300
2) PS-4480
3) PS-6013 (GD&T)
4) PS-9065
5) SAE/USCAR-2 REV 3

ANNUAL QUALITY REQUIREMENTS:

IT IS PERMISSIBLE TO PERFORM CONTINUOUS CONFORMANCE PER FCI SPECIFICATION #AQA-001 INSTEAD OF ANNUAL LAYOUT AND ANNUAL PV REQUIREMENTS OF QS9000 SECTION 2 AND USCAR-2 REV 3

ECN-NUMBER	DATE M-D-YY	REVISION	ZONE	CHANGE DESCRIPTION	DRAWN BY	CHK. BY	APPR. BY
5431	6/5/03	C1	-	REVISED AND REDRAWN FOR PREVIOUS CHANGES SEE DCA NO.56038308	T.ANGER	S. SIAN	S.SIAN

PRODUCT SPEC. N/A	PACKAGING SPEC. -	APPLICATION SPEC. AQA-001	THIS DRAWING AND ALL OTHER INFORMATION CONTAINED THEREIN IS PROPRIETARY AND THE PROPERTY OF FCI. This drawing may not be copied, reproduced or disclosed to any third party without the expressed written permission of FCI. © FCI April 1999.
TOLERANCES SEE NOTES	MATERIAL : SEE NOTES	SURFACE FINISH N/A	
CONTEMPRAT NO. DCA 56038308	COLOR : -		
DO NOT SCALE DRAWING	TOOL NO. M-121 CUST	ECO Lev. Code NA	

	DATE	NAME
DRAWN BY	12-12-98	T.S.GOPALAKRISHNAN
CHECKED BY	12-13-98	M.Subramanian
APPROVED BY	6/4/03	S.SIAN

TITLE: PLUG, END SEAL (THICK) 2.80mm IN-LINE SYS.

CSR NO. 6243 CAT. NO. TBD

FCI

3RD ANGLE | CAD SYSTEM pro / eng. | DIMENSION IN MILLIMETERS | DWG SIZE A1

DRAWING NUMBER H70001 | SHEET 1 / 1

FILE NAME H70001 | SCALE 10:1

54200005
PART NO.