SYMBOL DEFINITION		
A DIMENSION WITHOUT AN INSPECTION REPORT SYMBOL ( ) DOES NOT REQUIRE INSPECTION. IT MAY BE CONTROLLED ON THE INDIVIDUAL COMPONENT DRAWING.	TOTAL NO OF INSPECTIONS REQUIRED	23
	LAST NO. USED	17

MISSING SYMBOLS

NO MISSING SYMBOL NUMBER

DWG STATUS					ZONE	REVISION HISTORY	AUTH	DR	APVD1	APVD2
DATE	STG	REV	N/P	CHG						
17MY18	R	01	-	-		ALL PARTS - RELEASED	439747	LVD	JAA	RBS
26JN18	R	02	-	-		ALL PARTS - REMOVED "2 SURFACES" LABEL ON DIM #5	440221	DAV	JAA	RBS
02AU18	R	03	-	-		ALL PARTS - REVISED CONTACT PLATING IDENTIFICATION	440487	AGC	AGC	RBS
10OC19	R	04	-	-		ALL PARTS - UPDATED PART AVAILABILITY	550284	JAA	JAA	RBS
18MY20	R	05	-	-		ALL PARTS - 0.42 +0.05/-0.1 WAS 0.42 ±0.05	551316	LXA	LXA	RBS
26JN20	R	06	-	-		35472423-24 - RELEASED; 33218393-94 - CABLE SIZE WAS "0.35-0.5" & CABLE DIAMETER WAS "1.2-1.83"; ALL PARTS - UPDATED "PERFORMANCE REQUIREMENTS" NOTE (REQUIREMENTS OF GMW3191 JUN 2012 AND SAE/USCAR-2 R6 WAS REQUIREMENTS OF GMW3191 DEC 2007 AND SAE/USCAR-2 R5)	551560	JLL	GLG	RBS

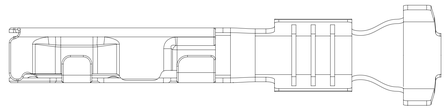

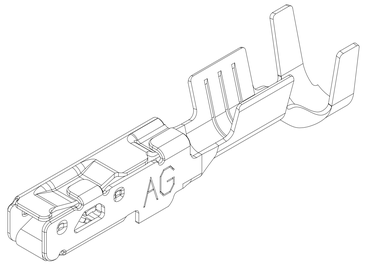

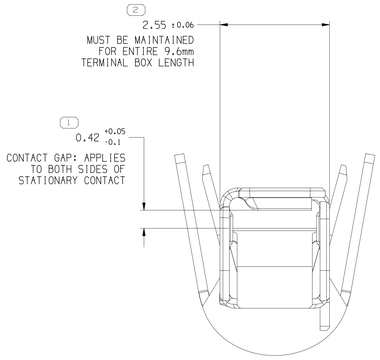

SCALE 20:1

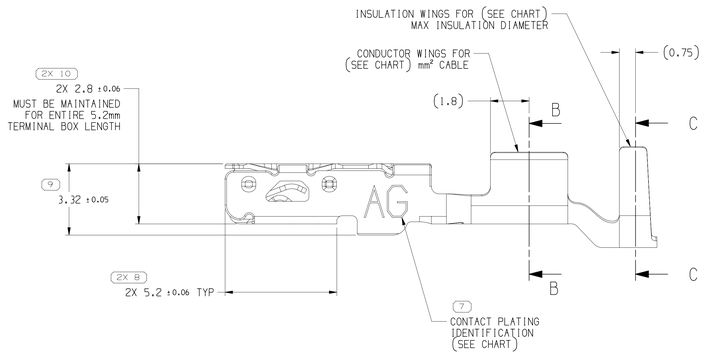

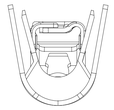

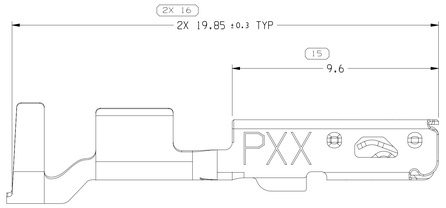

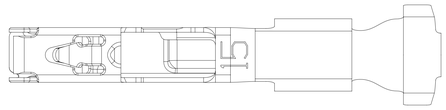

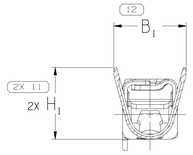

SECTION B-B

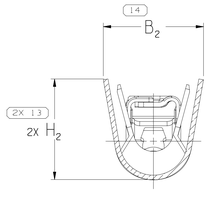

SECTION C-C

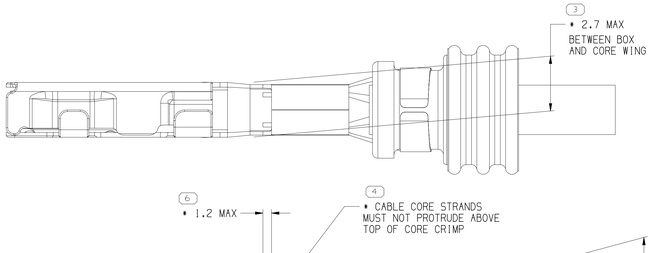

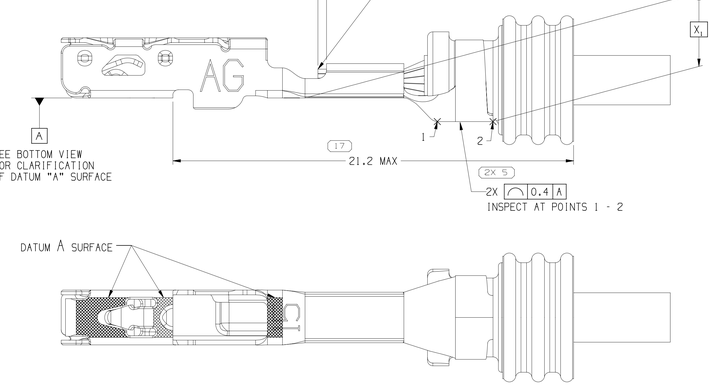

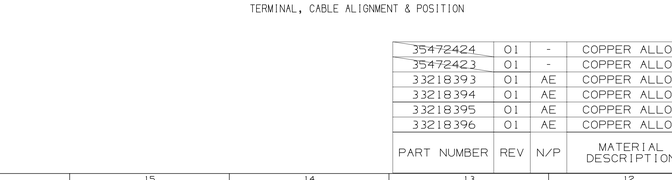

TERMINAL, CABLE ALIGNMENT & POSITION

NOTES

1. UNLESS OTHERWISE SPECIFIED AND/OR INDICATED:

   DIMENSIONS ARE TO FACE OF VIEW SHOWN AND AUTOMATICALLY ROUNDED BY COMPUTER FOR INSPECTION (SEE MATH MODEL FOR PRECISE DIMENSIONS). FOR ALL OTHER DIMENSIONS NOT SHOWN BUT REQUIRED FOR TOOL BUILD, SEE MATH MODEL FOR PRECISE TOOL PATH DATA.

2. RECOMMENDED MATING BLADE THICKNESS 0.8 +0.04/-0.03mm RECOMMENDED MATING BLADE WIDTH NOT TO EXCEED 1.6mm AND NO LESS THAN 1.1mm. SEE USCAR EWCAP-001 (1.5 BLADE) FOR MATING BLADE REQUIREMENTS.

3. MAXIMUM CURRENT CAPABILITY AS DEFINED BY USCAR-2 R5 SECTION 5.3.3 IS 21 AMPS WITH 1.5mm² COPPER CABLE.

4. * DENOTES DIMENSIONS MADE AT CUT-OFF AND CRIMP DIE

5. PLATING TYPE:

   I. SILVER 2.0 - 3.0 MICROMETERS THICK OVER NICKEL UNDERPLATE 0.127 - 0.510 MICROMETERS THICK.

   II. MATTE TIN 1.9 - 7.0 MICROMETERS THICK OVER NICKEL UNDERPLATE 0.127 - 0.510 MICROMETERS THICK.

   PLATING TYPE INFORMATION SHOWN ABOVE IS REFERENCE ONLY. PLATING REQUIREMENTS ARE CONTAINED IN APPLICABLE MATERIAL SPECIFICATION.

6. PARTS MEET THE PERFORMANCE REQUIREMENTS OF GMW3191 JUN 2012 AND SAE/USCAR-2 R6 REVISIONS FOR THE FOLLOWING CLASSIFICATIONS:

   TEMPERATURE CLASS 3 (-40° C TO +125° C)
   VIBRATION CLASS I (ON BODY OR CHASSIS)
   SEALING CLASS 2 OR 3 (SEALED-CONNECTOR & CABLE SEAL DEPENDENT)

7. DO NOT PROBE, TEST OR OTHERWISE CONTACT THE INTERIOR REGION (THE SPRING OR ANY MOVING PART) OF THIS TERMINAL. SEVERE DAMAGE CAN OCCUR, COMPRIMISING THE PERFORMANCE OF THE ELECTRICAL INTERFACE.

8. MAXIMUM INSULATION CRIMP WIDTH OF 4.60mm AND HEIGHT 4.15mm FOR CABLE SIZE UP TO 2.4mm O.D. FOR CAVITY DIAMETER 4.8mm; MAXIMUM CORE CRIMP WIDTH OF 2.70mm.

9. TYPICAL CABLE SEAL PART NUMBER IS A REFERENCE FOR A APTIV CABLE SEAL THAT ACCEPTS CABLE SIZES SIMILAR TO THE CORRESPONDING TERMINAL AND MATES TO THE SAME CONNECTOR CAVITY. CABLE DIAMETER RANGE OF DESIRED APPLICATION NEEDS TO BE WITHIN ALLOWABLE RANGE SHOWN ON CABLE SEAL DRAWING.

PART NUMBER	REV	N/P	MATERIAL DESCRIPTION	CONTACT AREA PLATING TYPE (SEE NOTE 5)	CRIMP AREA PLATING TYPE (SEE NOTE 5)	CONTACT PLATING I.D.	MATERIAL THICKNESS	CABLE I.D.	CABLE SIZE (mm²)	CABLE DIAMETER	B_1 ±0.15	B_2 ±0.25	(H_1)	(H_2)	TYPICAL CABLE SEAL
35472424	01	-	COPPER ALLOY	I	II	AG	0.22	22	0.35	1.2 - 1.7	1.95	4.2	1.8	4.1	13834630
35472423	01	-	COPPER ALLOY	I	II	AG	0.22	22	0.35	1.2 - 1.7	1.95	4.4	1.8	4.4	13834623
33218393	01	AE	COPPER ALLOY	I	II	AG	0.22	21	0.5	1.4 - 1.9	2.1	4.2	2.1	4.1	13834630
33218394	01	AE	COPPER ALLOY	I	II	AG	0.22	21	0.5	1.4 - 1.9	2.1	4.4	2.1	4.4	13834623
33218395	01	AE	COPPER ALLOY	I	II	AG	0.22	17	0.75 - 1.0	1.7 - 2.34	2.6	4.5	2.7	4.5	13834623
33218396	01	AE	COPPER ALLOY	I	II	AG	0.22	15	1.25 - 1.5	1.8 - 2.4	3.4	4.65	3.4	4.7	13834614

(2) PROCESS SENSITIVE DIMENSION

DIMENSIONS ENCLOSED IN ( ) INDICATE REFERENCE DIMENSIONS AND NO TOLERANCE LIMITS ARE ESTABLISHED

DIMENSIONAL RANGE (MM)		CHART D
FROM	0	>12
TO	12	
TOLERANCE UNLESS OTHERWISE SPECIFIED		
±0.1		±0.2
ANGULAR TOLERANCE ±2°		

A ——— LINE DRAWN THROUGH A PART NUMBER INDICATES THAT PHYSICAL PARTS ARE NOT AVAILABLE FOR ORDERING.

PART NUMBERS THAT DO NOT HAVE A LINE PRESENT INDICATE THAT PHYSICAL PARTS ARE AVAILABLE FOR ORDERING.

CONTACT APTIV SALES TO ASSURE AVAILABILITY OF PARTS.

DWG TYPE: PART DRAWING

STYLE

VOLUME (CM³)

DISTR CODE

UNLESS OTHERWISE SPECIFIED

THIS DOCUMENT IS IN ACCORDANCE WITH ASME Y14.5M-1994 AS AMENDED BY THE GM GLOBAL DIMENSIONING AND TOLERANCING ADDENDUM-2001. SEPARATE PATTERNS OF FEATURES MAY BE GAGED SEPARATELY REGARDLESS OF DATUM REFERENCES.

ALL DIMENSIONS ARE IN MILLIMETERS

REFERENCE

THIRD ANGLE PROJECTION

DO NOT SCALE

USE MATH DATA

NX

•APTIV•

CONNECTION SYSTEMS

WARREN, OH

COPYRIGHT 2018 APTIV. ALL RIGHTS RESERVED.

THIS DRAWING IS THE PROPERTY OF APTIV AND CONTAINS APTIV CONFIDENTIAL INFORMATION. THE REPRODUCTION, DISTRIBUTION AND UTILIZATION OF THIS DOCUMENT OR ITS RELATED CAD MATH DATA, AS WELL AS COMMUNICATION OF ANY CONTENT TO OTHERS, WITHOUT EXPRESS AUTHORIZATION, IS PROHIBITED.

		DATE
DR		
APVD1	LUIS VILLARREAL	17MY18
APVD2	J.S. ALVARADO	17MY18
APVD3	ROBERT SNADER	17MY18
APVD4		
APVD5		

SUBSTANCES OF CONCERN AND RECYCLED CONTENT PER APTIV 10949001

MATERIAL: SEE CHART

DRAWING NAME: TAXI TERM F OCS 1.5 SEALED

DRAWING NUMBER: 13887280

SIZE	SCALE	FRAME NO	SHEET NO	STG	REV	N/P
A0	10:1	1 OF 1	2 OF	R	06	-

User: L2K2z
Date: 27-Jul-20 Time: 16:40:10
Page: 1 Page Name: Page 1
C:\Users\L2K2z\Desktop\Dwgs\13887280.DRB