ETAT / *STATE*	REFERENCES / *PART-NUMBERS*															
	SIDE BY SIDE				SWS		SIDE BY SIDE		SWS		SIDE BY SIDE		SWS		MATIERE *MATERIAL*	CLASSE *RANGE*
Pré-étamé / *Pre-tinned* 1 to 3 µm Sn	33400435	01	33501792	01	35174381	01	33512109	01	35174382	01	33512190	01	35174383	01	Cu Sn 0.15 (76)	125°
Post-argenté/*Post-silvered* 3 to 5 µm Ag	33405986	01	33405987	01	/		33405988	01	/		33405989	01	/			
Post-doré / *Post golded* 0.4µm Au	33405985	01	33522699	01	/		33522701	01	/		33522703	01	/			
Post-doré / *Post golded* 0.80µm Au	35330156	01	35330157	01	/		35330158	01	/		35330159	01	/			
Poids sans bande porteuse Weight without strip (gr)	0.29		0.32				0.34				0.36					
Gamme / *Range*	0		1				4				2					
Section / *Gauge*	0.13 To 0.22		0.35 To 0.70				0.75 To 1.30				1.40 To 2.00					
Ø Isolant / Ø *Insulation*	0.95 To 1.35		1.25 To 1.70				1.60 To 2.30				2.00 To 2.90					
A± 0.2	1.75		2.60				2.75				3.10					
A1± 0.2	1.60		/				/				/					
B± 0.2	1.70		2.20				2.86				3.50					
B1± 0.2	1.50		/				/				/					
C± 0.2	0.31		0.75				0.75				0.75					
D± 0.3 Mesurande	2.10		3.05		4.30		3.72		4.50		4.60		5.00			
E± 0.2	1.90		3.03		4.15		3.71		4.50		4.60		4.70			
F± 0.2	0.61		0.80		1.35		1		1.35		1.30		1.35			
K	-0.10		0.35		-0.35		-0.05		-0.50		-0.5		-0.60			
L	0.20		0.45		0.45		0.30		0.30		0.20		0.20			

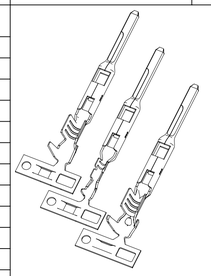

DWG STATUS DATE	STG	REV	N/P	CHG	ZONE	REVISION HISTORY	AUTH	DR	APVD 1	APVD 2
13AP18	R	01				FILE TRANSLATED FROM MVL SYSTEM REDRAWN IN NX ADDED SWS TERMINAL		L.DOM	S.BOS	P.CAP
03JN19		02				UPDATED SWS WINGS (D MESURANDE; SIZE 28b) ADDED GOLD VERSION (THICKNESS 1.27 µm)		L.DOM	S.BOS	P.CAP
31JL19		02	AA			UPDATED SWS WINGS (DIMENSION D) REMOVED POST GOLDED 1.27µm Au		L.DOM	S.BOS	P.CAP
14OC19		02	AB			ADDED POST GOLDED 0.80µm Au		L.DOM	S.BOS	P.CAP
31JA20		02	AC			RELEASED GILDED TERMINAL P/N 35330157/ 35330158		L.DOM	A.ELM	S.BOS
28AP20		02	AD			ADDED SHEET 3		L.DOM	A.ELM	S.BOS

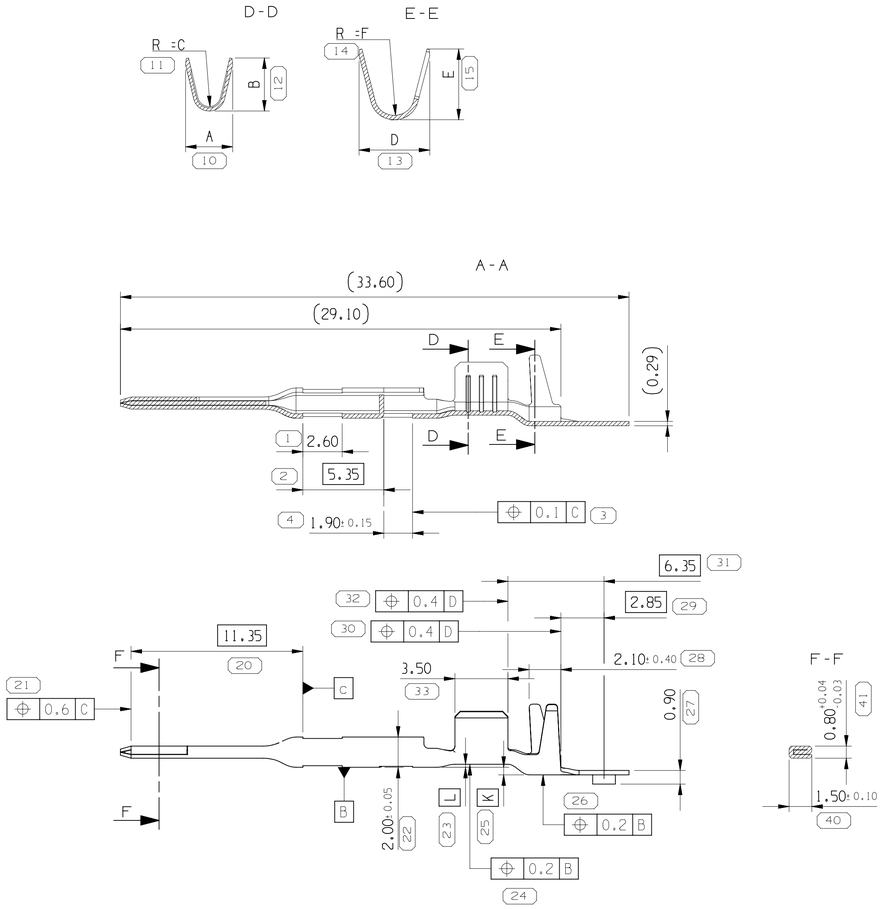

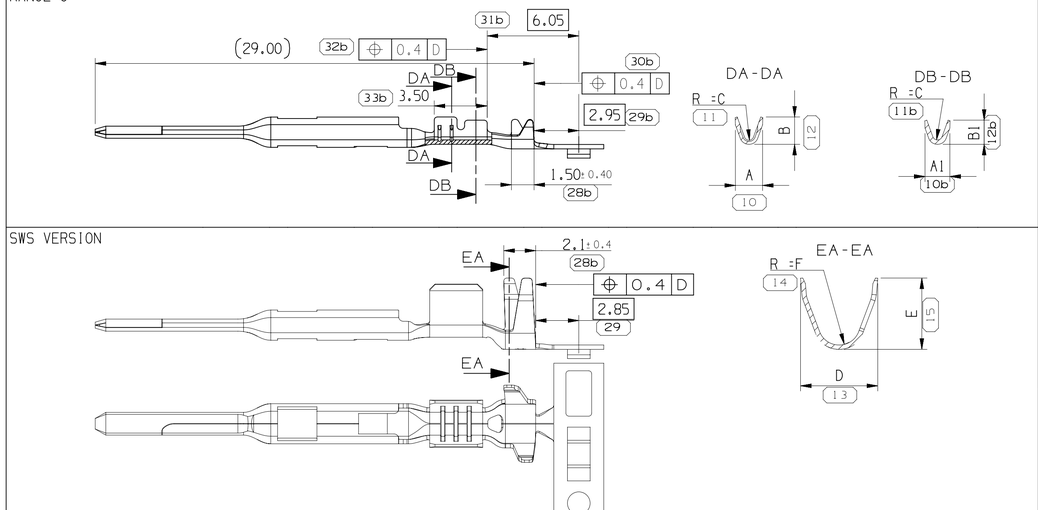

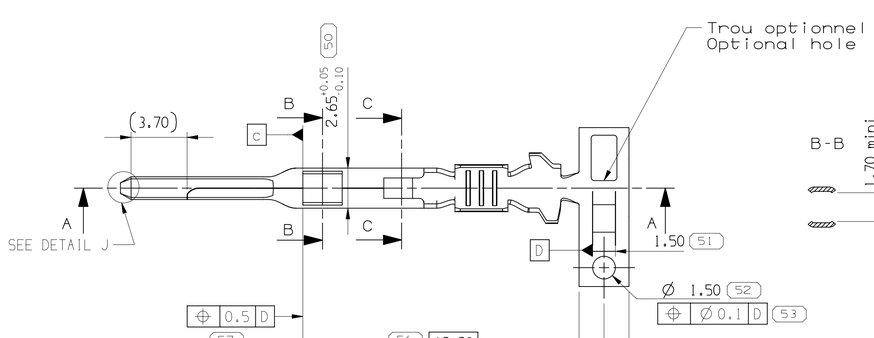

NOTES:

1. Modèle représenté en gamme 2 (1.4 à 2mm²)
   Model display in range 2 (1.4 to 2mm²)
2. (xx) Côte non tolerancee, pour information
   (xx) No toleranced dimension, given for information
3. Conditionement: PU 131
   Packaging: PU 131
4. Specification de sertissage : FE-CS 14-006
   Crimping specification: FE-CS 14-006

NOMBRE DE DIMENSIONS NUMEROTEES QUANTITY OF NUMBERING DIMENTIONS	54
Numéro non utilisé *Numbering not used*	5-9 16-19 34-39 44-49 58-59 65-69
Dernier numéro utilisé *last number used*	76

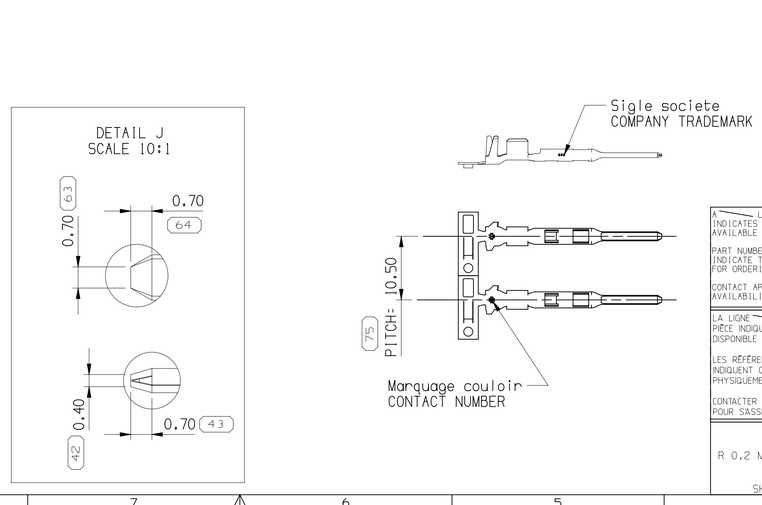

DIM TO CHECK COTES A VERIFIER
( ) DIM FOR HELP COTES POUR INFO
THEORETIC DIM COTES THEORIQUES

A LINE DRAWN THROUGH A PART NUMBER INDICATES THAT PHYSICAL PARTS ARE NOT AVAILABLE FOR ORDERING.

PART NUMBERS THAT DO NOT HAVE A LINE PRESENT INDICATE THAT PHYSICAL PARTS ARE AVAILABLE FOR ORDERING.

CONTACT APTIV SALES TO ASSURE AVAILABILITY OF PARTS.

LA LIGNE TRACÉE SUR LA RÉFÉRENCE PIÈCE INDIQUE QUE LA PIÈCE N'EST PAS DISPONIBLE À LA COMMANDE.

LES RÉFÉRENCES PIÈCES QUI NE SONT PAS BARRÉES INDIQUENT QUE CELLES-CI SONT DISPONIBLES PHYSIQUEMENT POUR ÊTRE COMMANDÉES.

CONTACTER LE SERVICE COMMERCIAL DE APTIV POUR S'ASSURER DE LA DISPONIBILITÉ DES PIÈCES

R 0.1 MAX
R 0.2 MAX
SHARP CORNER TOLERANCE

DWG TYP
PART DRAWING

WEIGHT (GR)
SEE TABLE

VOLUME (CM³)

ROUTING

DISTR CODE
D

UNLESS OTHERWISE SPECIFIED

GENERAL TOLERANCES ACCORDING TO:
±0.2 ; ±2°

GD&T ACCORDING TO:

REFERENCE
pcc0815468

FIRST ANGLE PROJECTION

DO NOT SCALE
USE MATH DATA

CAD NX

•APTIV•

CONNECTION SYSTEMS
Epernon, France

COPYRIGHT 2014 APTIV. ALL RIGHTS RESERVED.

THIS DRAWING IS THE PROPERTY OF APTIV AND CONTAINS APTIV CONFIDENTIAL INFORMATION. THE REPRODUCTION, DISTRIBUTION AND UTILIZATION OF THIS DOCUMENT OR ITS RELATED CAD MATH DATA, AS WELL AS COMMUNICATION OF ANY CONTENT TO OTHERS, WITHOUT EXPRESS AUTHORIZATION, IS PROHIBITED.

CE PLAN EST LE PROPRIETE DE DELPHI CORPORATION ET CONTIENT DES INFORMATIONS DELPHI CONFIDENTIELLES LA REPRODUCTION, LA DISTRIBUTION ET L'UTILISATION DE CE DOCUMENT OU DE SES DONNÉES MATHÉMATIQUES CAO, AINSI QUE LA COMMUNICATION DE TOUT CONTENU À AUTRUI, SANS AUTORISATION EXPRESSE EST INTERDITE

		DATE
DR	L DOMERGUE	04FE13
APVD1	F FAURIE	22AU14
APVD2	S LACOTE	22AU14
APVD3	Patrice CAPPE	22AU14
APVD4		
APVD5		

SUBSTANCES OF CONCERN AND RECYCLED CONTENT PER APTIV 10949001
MATIERES PROSCRITES ET CONTENU RECYCLABLE SELON DELPHI 10949001

MATERIAL
SEE TABLE

DRAWING NAME
1.5 X 0.8 MALE TERMINAL

SICMA 4

DRAWING NUMBER
33521740

SIZE	SCALE	FRAME NO	SHEET NO	STG	REV	N/P
A1	5:1	1 OF 1	1 OF 1	R	02	AD

CONTROLLED DOCUMENTS ARE ONLY AVAILABLE ON THE SERVER

User: S32097
Work: 33521740-CUS01-S01/02AD
CZ_09_04282020_13:30:Pdl:cub
Date: 28-avr.-20 Time: 13:30:33