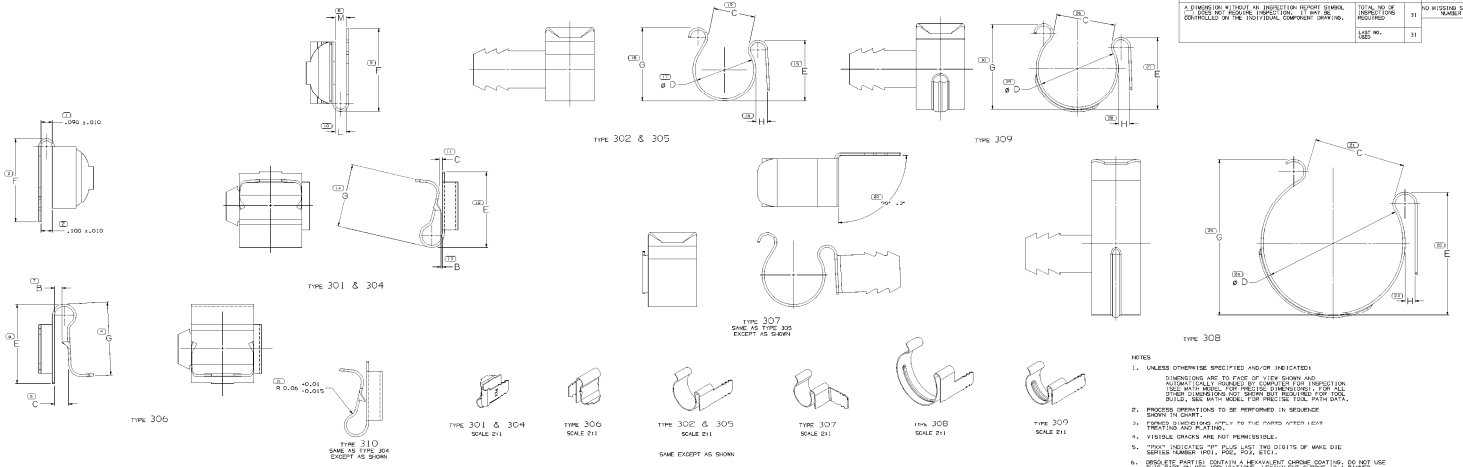

SYMBOL DEFINITION		MISSING SYMBOLS	
A DIMENSION WITHOUT AN INSPECTION REPORT SYMBOL DOES NOT REQUIRE INSPECTION. IT MAY BE CONTROLLED ON THE PROTOTYPICAL COMPONENT DRAWING.	TOTAL NO OF INSPECTIONS REQUIRED	31	NO MISSING SYMBOL NUMBER
	LAST NO USED	31	

REV LEVEL DATE	REV	REVISION HISTORY	NOTE	BY	APVD	PLANT
160208	R B1	- -	-	REMOVED MCS DRAWING ALL PARTS - REDRAWN TO MIL. STANDARD. SEMICIDE - .005 +.010-.000 MIN .005 +.010	261.37	MARTINEZ TF
070401	R B2	- -	-	19410843 - RELEASED	2.25.05	BOSE JLJ PHP
100201	R B3	- -	-	DRAWING & 19410843 REVISED CHART	21.41.10	TRAYNOR TRT CT
100201	S B4	- -	-	KEEP TOLERANCE TO DIM A137	2.14.07	JLJ JLJ PHP
110201	R B5	- -	-	TYPE 304 ADDED P.2 & P.3 VALUES TO CHART TYPE 301 ADDED P.3 SEE REVISED DRAWING	2.14.08	TRAYNOR TRT CT
120201	R B6	- -	-	19410843 & 19410843 - RELEASED	2.14.09	MARTINEZ CT
151202	R B7	- -	-	19409411 - .060-.010/-.040 MIN, .005/.375 +.000-.010/-.010 MIN .0490-.010, .005 +.007/-.005 MIN .005	2.14.09	LUIS JLJ TF
180201	R B8	- -	-	19410843, 27 - RELEASED; 19409410 - RELEASED; 19409411 - REVISED PROCESS NOTES ALL SEE DRAWING	2.14.09	CASTRO TF
080201	R B9	- -	-	19410843 - REVISED PROCESS NOTES ALL SEE DRAWING	2.14.09	CASTRO TF
110201	R 10	- -	-	19410843 - OBSOLETE AND ADDED NOTE 7.	2.15.09	RIVA JAN SAN
011204	R 11	- -	-	19410843-04, 19409410 & 19409411-RELEASED AND ADDED PROCESS NOTE 7 & 8.	2.16.21	JOSE TRO SAN
090204	R 12	- -	-	ALL PARTS - REVISED NOTE 15; 19409411 - RELEASED	2.19.21	KOK KOK SAN
250204	R 13	- -	-	19409410 (R9, 19409411 - 19410843 & 19410843 - REVISED NOTE 7 & 8 - CHART 1, PER MATRIX PROCESS NOTES 8 & 9.	2.24.08	RIVA AZE TF
070204	R 14	- -	-	19409411 & 19410843 - OBSOLETE	2.27.08	CCC JAN TF
141204	R 15	- -	-	19.20.41 - RELEASED	2.28.04	JPE JAN TF
280204	R 16	- -	-	19409411 - UPDATED PDM ATTRIBUTES	3.4.04	ANDRAE TF
010405	R 17	- -	-	19.20.41 & 19409410 & 19409411 - .005 +.010 MIN .005 +.010 MIN .005 +.010 MIN .005 +.010	3.4.07	JTJ TRV TF
010405	R 18	- -	-	19409411 - ADDED WHTL SIZE AND MATERIAL SPEC	3.4.07	JBP TRV TF
170405	R 19	- -	-	19.20.41-16 - RELEASED	3.9.05	TRV JAN SAN
190205	R 20	- -	-	19.20.41-16, 19.20.41-21, 19.20.41-24, 19.20.41-25, 19.20.41-26, 19.20.41-27, 19.20.41-28, 19.20.41-29, 19.20.41-30, 19.20.41-31, 19.20.41-32, 19.20.41-33 - REVISED	2.7.20.21	KOK JAN TRC
190205	R 21	- -	-	19.20.41-16 - OBSOLETE	2.7.20.21	CCC JAN TRC
190205	R 22	- -	-	19.20.41-17 - OBSOLETE	2.7.20.21	JTJ JAN TRC
181204	R 23	- -	-	ALL ACTIVE PARTS - CREATED TOOL DIMENSIONS - ADDED NOTE 16	2.7.20.21	TRV JAN TF
181204	R 24	- -	-	ALL ACTIVE PARTS - ADDED NOTE 17	2.7.20.21	BLR JAN TF
210104	R 25	- -	-	19.20.41-16, 19.20.41-17 & 19.20.41-21 - OBSOLETE	2.7.20.08	ANR JAN TF
180404	R 26	- -	-	19.20.41-17 - REVISED AND ADDED PROCESS NOTE 18	2.9.21.08	SPR JAN TF
110704	R 27	- -	-	19.20.41-17 - ADDED SEPERATING FOR ONLY WHS TYPE 305	2.9.21.08	TRV JAN TF
180204	R 28	- -	-	19.20.41 - ADDED WHTL SIZE WHS 0.0625	2.9.08.02	ACR TJ TF
040204	R 29	- -	-	19.20.41 - PROCESS NOTE NO. 1 & 14	2.9.7.0.21	JCA JAN TF
251.407	R 30	- -	-	19.20.41 - DIM "C" ADD .005 DIM "D" ADD .005 REMOVED 'P' STAMP	4.2.0.7.21	CHS JAN PHP
070107	R 31	- -	-	19.20.41 - WHTL - REMOVED STAMP	4.2.1.6.07	RIV JAN TF
090407	R 32	- -	-	19.20.41 - ADDED PER G AND TYPE 305	4.1.2.0.0	JBP AZE TF
251.407	R 33	- -	-	19.20.41 - DIM "C" WAS .4.4.0.0.0.0.0	4.1.7.3.1	JBP JAN PHP
251.407	R 34	- -	-	19.20.41 & 19.20.41 - OBSOLETE	4.1.7.3.1	JBP JAN AZE
110.407	R 35	- -	-	19.20.41 - ADDED SEPERATING FOR ONLY WHS TYPE 305	4.1.0.0.0	JBP JAN TF
150408	R 36	- -	-	19.20.41, 19.20.41 & 19.20.41 - OBSOLETE	4.1.4.0.0	JTJ JAN TF
080114	R 37	- -	-	19.20.41 - PER TYPE 304 AND ADDED DIM "E" PER 19.20.41 (SECTION) - OBSOLETED	4.3.4.7.1	ANR JAN SAN
070414	R 38	- -	-	19.20.41 - REMOVED DIMENSIONS 1.0.0.0.0.0