DO NOT SCALE

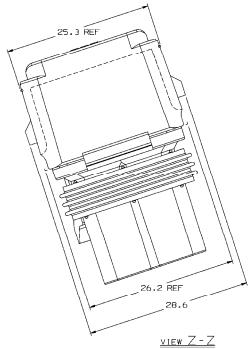

VIEW Z-Z

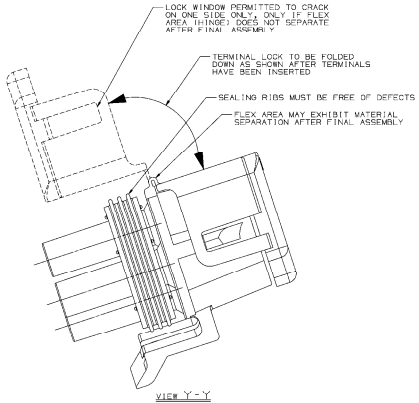

VIEW Y-Y

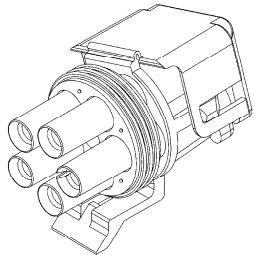

DATE	SYM	REVISION RECORD	AUTH	DR	CK
24OC97	—	15324197 - RELEASED TO			
		REV "A"	970005	JBS	JAN
24OC97	—	12034342 - WAS SEPARATE			
		REF SIZE REV LEVEL			
		REMAINS AT "A"	192643	JBS	JAN

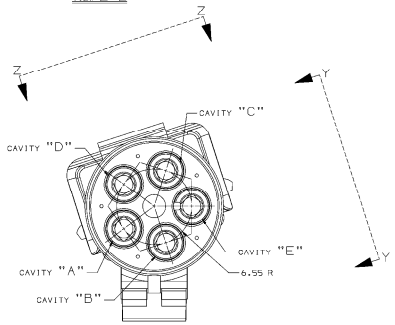

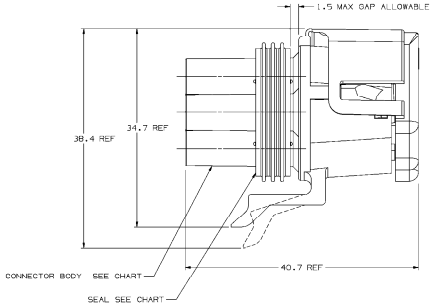

PART NO
1532 4199

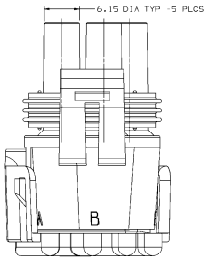

NOTES:

1. UNLESS OTHERWISE SPECIFIED AND/OR INDICATED:
   DIMENSIONS ARE TO FACE OF VIEW SHOWN AND AUTOMATICALLY RQUADED BY COMPUTER FOR INSPECTION. (SEE MATH MODEL FOR PRECISE DIMENSION)
   FOR ALL OTHER DIMENSIONS NOT SHOWN BUT REQUIRED FOR TOOL BUILD, SEE MATH MODEL FOR PRECISE TOOL PATH DATA.
2. MATING CONNECTOR - SEE CHART.
3. USE MALE TERMINAL 12089040 OR EQUIVALENT FOR "PANEL MOUNT" (DEVICE) APPLICATIONS.
4. USE FEMALE TERMINAL 12089188 OR EQUIVALENT FOR "IN-LINE" APPLICATIONS.
5. WHEN PARTS ARE SHIPPED, THEY MUST BE PACKED IN PLASTIC BAGS, OR SHIPPING CONTAINERS MUST BE LINED WITH PLASTIC LINERS. BAGS OR LINERS MUST BE SEALED TO AVOID ENTRY OF FOREIGN MATTER.
6. SEALING CODE J.

   DESIGN WILL PASS SALT FOG AND IMMERSION TEST AFTER CONDITIONING AS SPECIFIED IN ESA-644 (WEATHER-PACK), ESA-710 (METRI-PACK), ESA-650 (UNDERHOOD MICRO-PACK), C-4006 (WORLD CONNECTOR), ETC. - WHEN MATED TO MATING PART OR EQUIVALENT.
7. WHEN DESIGNING A PART TO MATE TO THIS WEATHER PACK CONNECTION, REQUEST THE LATEST COPY OF DRAWING NUMBER 12020084 FROM THE PACKARD ELECTRIC DIVISION.

PART NO	REV	STATUS	TYPE	CONNECTOR BODY	STANDARD DESCRIPTION	REFERENCE TERMINAL/GENDER	SEAL	MATING CONNECTOR
15324197	A		102	15324196	ASM CONN 5F W/P TWR SLD	12089188 - FEMALE	12034278	12065158
12034342	A		101	12034277	ASM CONN 5M W/P TWR SLD	12089040 - MALE	12034278	12034276

PART NO
1532 4199

DRAWING TYPE
PID

Delphi Packard

THIRD ANGLE PROJECTION

CODE NO 6900 | SC

DATE 24OC97

SCALE 4:1

REFERENCE NO

MATERIAL SPEC

OTHER DRAWINGS AVAILABLE

METRIC
DIMENSIONS ARE IN MILLIMETERS UNLESS OTHERWISE SPECIFIED
TOLERANCE UNLESS OTHERWISE SPECIFIED
DECIMAL ANGULAR ±2°
ONE PLACE ±0.3
TWO PLACE ±0.15

DES
DR J. BARBOUTI 24OC97
CK JOSE HUERTA 18NOV97
APPRD. GALLESOS 09DEC97
VOL ENT

SEE CHART

NAME
TAXI ASM CONN 5 W/P TWR SLD

PART NUMBER
1532 4199

SIZE A0

DELPHI PACKARD ELECTRIC SYSTEMS
WARREN, OHIO 44486