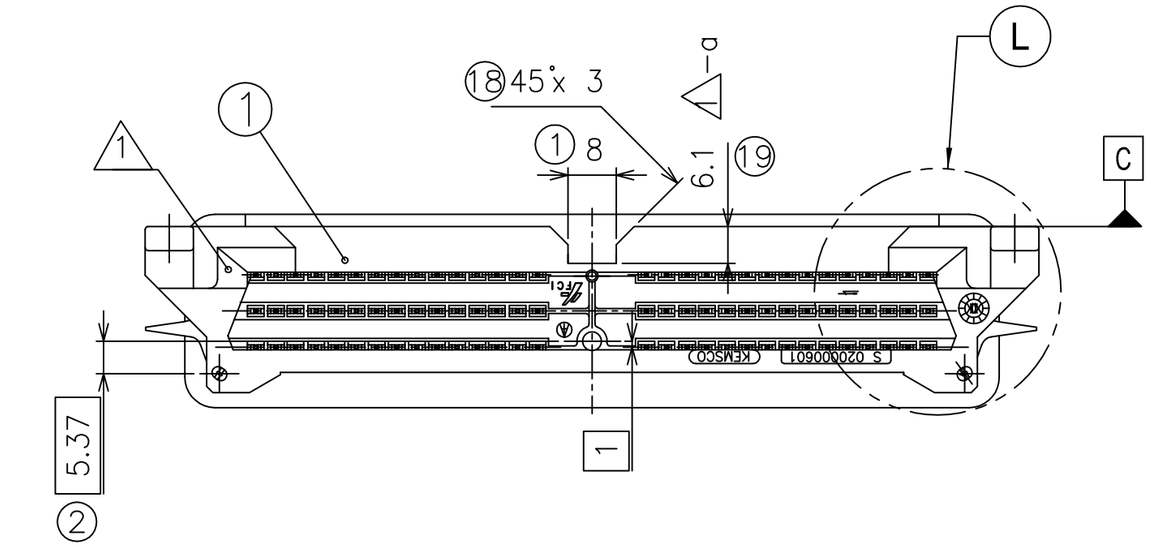

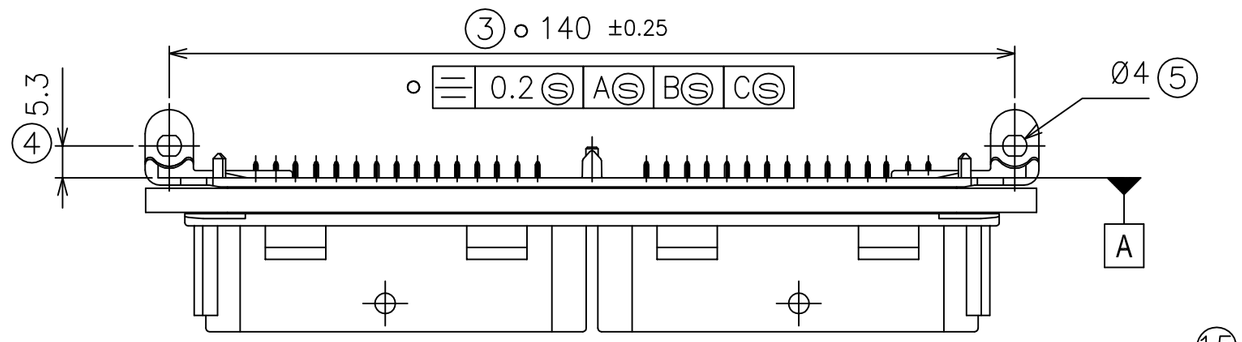

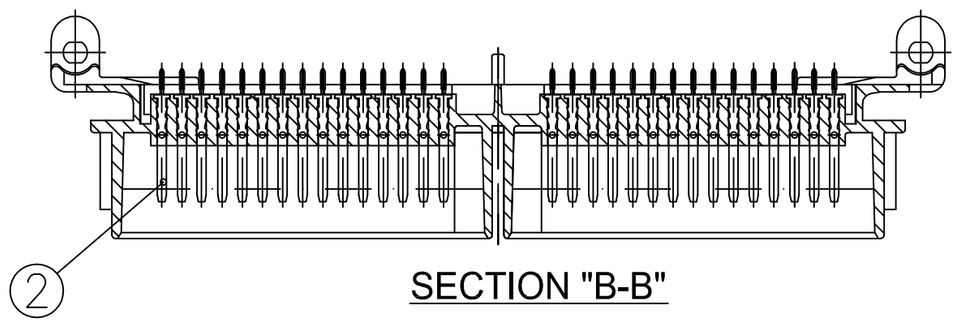

SECTION "B-B"

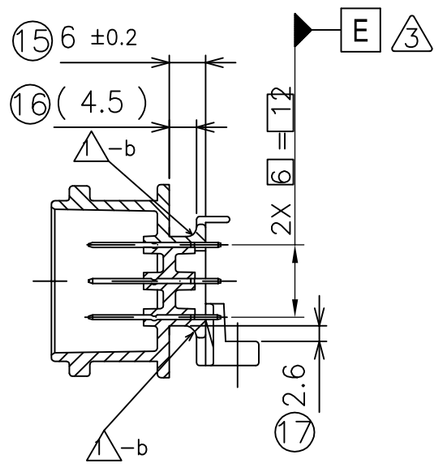

SECTION "A-A"

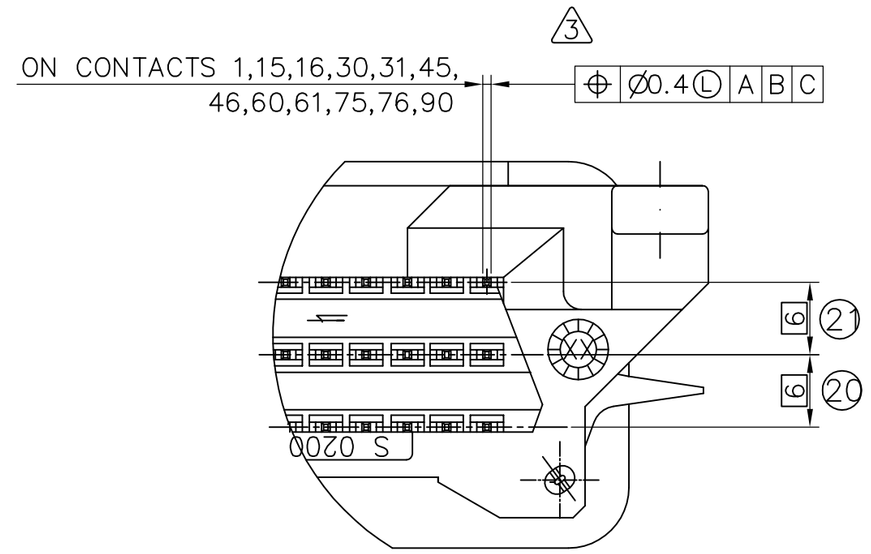

DETAIL "L"
SCALE 2:1

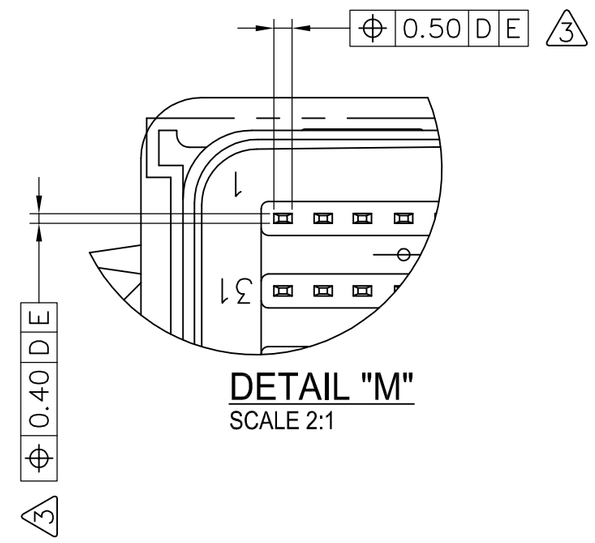

DETAIL "M"
SCALE 2:1

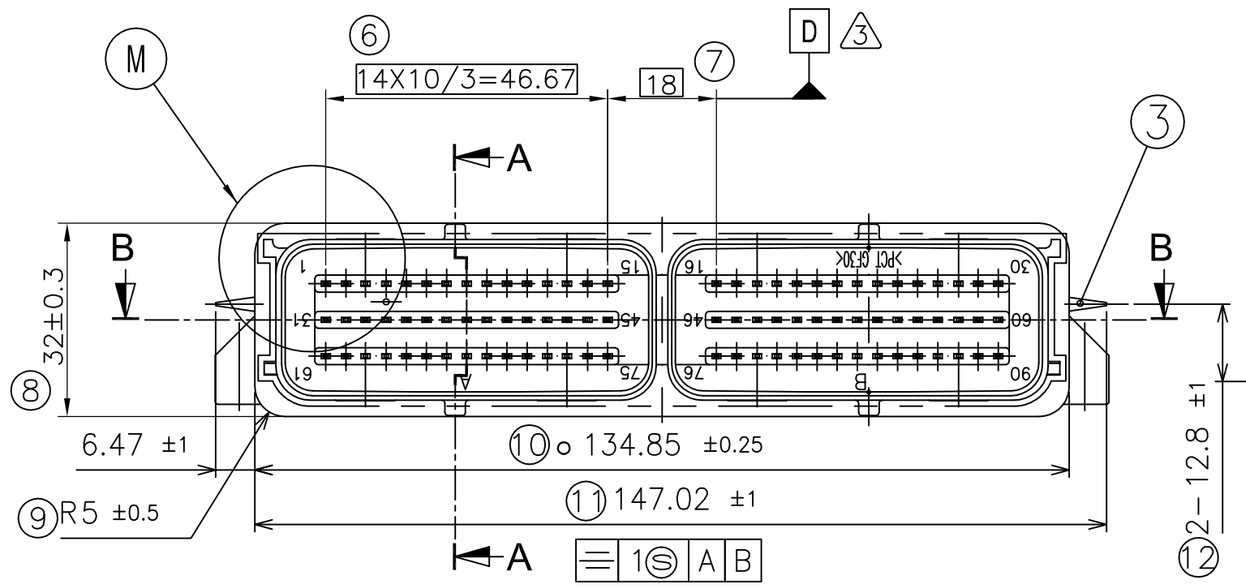

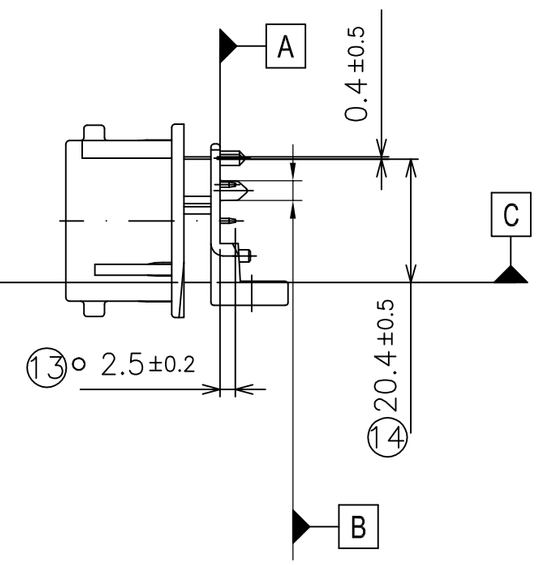

NOTES

1. Soldering testing and requirement in specification S209 425 000 and S209 425 100.
2. The packagings of the component is described in specification S208 547 001.
3. Radius without dimensions 0.5±0.15.
4. Connector interface definition according to FCI drawing : 211 FT 0142.
5. ▭ : Importance dim.
6. ○ : Functional dim.
7. Must meet the spec no. FCI AK002
4. Connector interface definition according to

NO	PART NO	PART NAME	MATERIAL	Q'TY	REMARKS
3	100995-00	Inner Seal	SILICONE	1	GRAY
2	502966-00	Terminal	CuZn30	90	Ni-SnPb
△2 1	500866-00	Housing	PCT+GF30% CGT 33	1	BLACK

ECO NO.	Rev.	DESCRIPTION	DATE	DR	APPR
	△3	Positioning was added for interface area	2002.06.20	JJH	LMY
	△2	Raw material was changed (Old one was CG933)	2000.02.09	LSI	KYH
		Add "b"area			
	△1	Shape change for forcing Mounting area (a was 1.50)	1999.09.15	LSI	KYH

"Any exploitation of this document which is not expressly permitted by the Copyright Act, in particular to copy this document, to pass it on to third parties, to adapt it or to store it on microfilm or in systems of electronic data processing is forbidden without express authorisation. Offenders are(inter alia) liable to the payment of damages. The communication of the content of this document to third patier is forbidden by contract. The objects shown in this document may also be protected by a patentor utility model; insofar, all rights are reserved"

PRODUCT SPECIFICATION	TOLERANCES: SEE DRAWING	MATERIAL: SEE DRAWING	SURFACE FINISH: SEE DRAWING	FCI FRAMATOME GROUP	ISO PRODUCTION DIMENSION IN MILLIMETERS
PACKAGING SPECIFICATION	DO NOT SCALE PRINT	WEIGHT Kg, g	SCALE 1 : 1		CAD CATIA Ver4.1.9
APPLICATION SPECIFICATION	DATE / NAME	PART NAME: 90way Pinheader Assy		PART NO. 901629-01	SIZE A2
	DESIGN 1999.04.26 LJS	90 WAY PIN HEADER CONNECTOR		S 020000601	SHEET 1 OF 1
	CHECK 2002.06.20 JJH				
	APPROVED 2002.06.21 LMY	PROJECT NAME KEMSCO	FILE NAME -	DESIGN PROCESS CUSTOMER DESIGN	