SYMBOL DEFINITION		
A DIMENSION WITHOUT AN INSPECTION REPORT SYMBOL ( ) DOES NOT REQUIRE INSPECTION. IT MAY BE CONTROLLED ON THE INDIVIDUAL COMPONENT DRAWING.	TOTAL NO OF INSPECTIONS REQUIRED	32
	LAST NO. USED	26

MISSING SYMBOLS
NO MISSING SYMBOL NUMBER

DWG STATUS					ZONE	REVISION HISTORY	AUTH	DR	APVD 1	APVD 2
DATE	STG	REV	N/P	CHG						
25JA19	R	01	-	-		ALL PARTS: RELEASED PART DRAWING	441143	ES	ES	RS
28FE19	R	02	-	-		35271144 & 35271144 - CORRECTED "CABLE I.D." INFO ON CHART; ALL PARTS - UPDATED PDM ATTRIBUTES	442564	CGD	CGD	RS
14MR19	R	03	-	-		ALL PARTS - UPDATED PDM ATTRIBUTES	442710	JS	JS	RS
09MY19	R	04	-	-		ALL PARTS - UPDATED PART AVAILABILITY	443236	CGD	CGD	RS

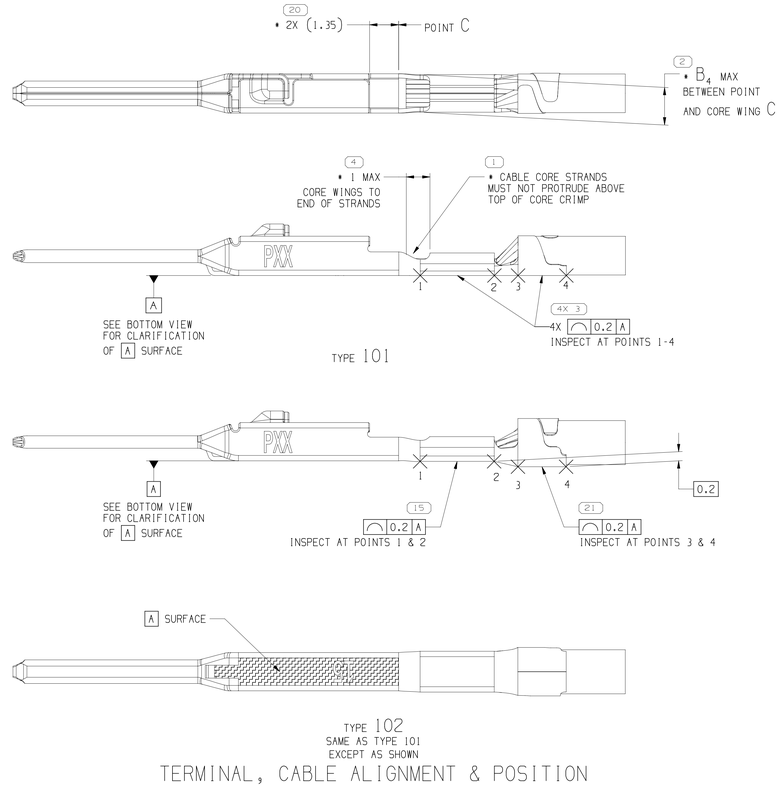

TERMINAL, CABLE ALIGNMENT & POSITION

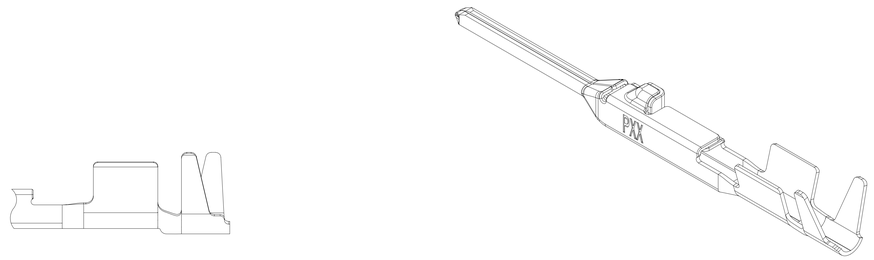

TYPE 102
SAME AS TYPE 101 EXCEPT AS SHOWN

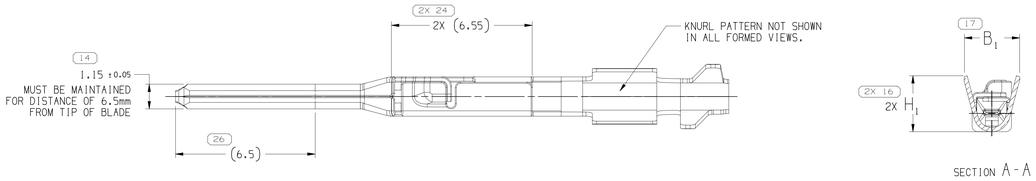

SECTION A-A

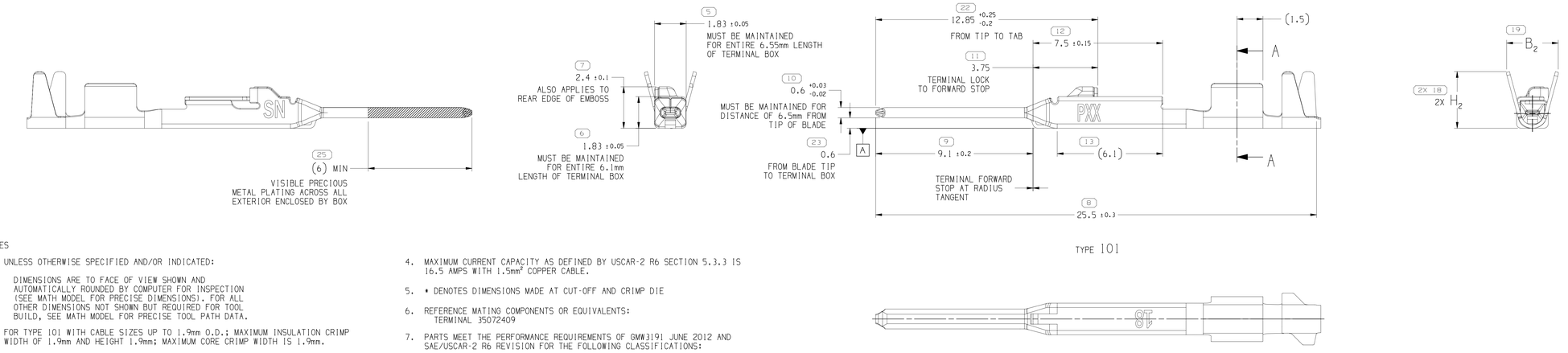

NOTES

1. UNLESS OTHERWISE SPECIFIED AND/OR INDICATED:

   DIMENSIONS ARE TO FACE OF VIEW SHOWN AND AUTOMATICALLY ROUNDED BY COMPUTER FOR INSPECTION (SEE MATH MODEL FOR PRECISE DIMENSIONS). FOR ALL OTHER DIMENSIONS NOT SHOWN BUT REQUIRED FOR TOOL BUILD, SEE MATH MODEL FOR PRECISE TOOL PATH DATA.

2. FOR TYPE 101 WITH CABLE SIZES UP TO 1.9mm O.D.; MAXIMUM INSULATION CRIMP WIDTH OF 1.9mm AND HEIGHT 1.9mm; MAXIMUM CORE CRIMP WIDTH IS 1.9mm.

   FOR TYPE 101 WITH CABLE SIZES GREATER THAN 1.9mm BUT LESS THAN 2.34mm O.D.; MAXIMUM INSULATION CRIMP WIDTH OF 2.25mm AND HEIGHT 2.35mm; MAXIMUM CORE CRIMP WIDTH IS 1.9mm

   FOR TYPE 102 WITH CABLE SIZES UP TO 2.4mm O.D.; MAXIMUM INSULATION CRIMP WIDTH OF 2.6mm AND HEIGHT 2.6mm; MAXIMUM CORE CRIMP WIDTH IS 1.9mm

3. PLATING TYPE:

   I. REFLOW TIN 1.9 - 3.3 MICROMETERS THICK OVER NICKEL UNDERPLATE 0.13 - 0.5 MICROMETERS THICK.

   II. SILVER 1.0 - 2.0 MICROMETERS THICK OVER NICKEL UNDERPLATE 0.127 - 0.254 MICROMETERS THICK.

   III. MATTE TIN 1.9 - 7.0 MICROMETERS THICK OVER NICKEL UNDERPLATE 0.127 - 0.254 MICROMETERS THICK. (FOR USE WITH SELECTIVE SILVER PLATING SPECIFICATION)

   PLATING TYPE INFORMATION SHOWN ABOVE IS REFERENCE ONLY. PLATING REQUIREMENTS ARE CONTAINED IN APPLICABLE MATERIAL SPECIFICATION.

4. MAXIMUM CURRENT CAPACITY AS DEFINED BY USCAR-2 R6 SECTION 5.3.3 IS 16.5 AMPS WITH 1.5mm² COPPER CABLE.

5. • DENOTES DIMENSIONS MADE AT CUT-OFF AND CRIMP DIE

6. REFERENCE MATING COMPONENTS OR EQUIVALENTS:
   TERMINAL 35072409

7. PARTS MEET THE PERFORMANCE REQUIREMENTS OF GMW3191 JUNE 2012 AND SAE/USCAR-2 R6 REVISION FOR THE FOLLOWING CLASSIFICATIONS:

   TEMPERATURE CLASS 3 (-40° TO 125° C)
   VIBRATION CLASS 1 (ON BODY OR CHASSIS)
   SEALING CLASS 1 (UNSEALED) FOR CABLE I.D. 25 & 15
   SEALING CLASS 2 OR 3 (SEALED CONNECTOR DEPENDENT) FOR CABLE I.D. 21 & 18

8. FOR TERMINALS PACKAGED & STORED IN THE APPROVED MANNER, TARNISH ON SILVER PLATED SURFACES WILL NOT AFFECT THE PERFORMANCE OF THE PART.

9. 15 CABLE I.D. P/N IS NOT APPROVED FOR USE IN SUMITOMO CONNECTOR HOUSINGS - THE TERMINAL-CONNECTOR POLARIZATION FEATURE IN THE CONNECTOR CAVITY DOES NOT MEET REQUIREMENTS.

PART NO	REV	N/P	CABLE I.D. STATUS	TYPE	MAT'L SPEC	MAT'L SIZE	CONTACT AREA PLATING TYPE (SEE NOTE #3)	CRIMP AREA PLATING TYPE (SEE NOTE #3)	CONTACT PLATING I.D.	CABLE I.D.	CABLE SIZE (mm²)	CABLE DIAMETER	B_1 ±0.15	B_2 ±0.25	B_4	(H_1)	(H_2)
											COPPER						
35267295	01	AC	-	101	TIN PLATED COPPER ALLOY	0.2 X 29.5	I	I	SN	21	0.35 - 0.5	1.2 - 1.83	2.1	2.85	1.88	2.05	3.15
35267294	01	AC	-	101	TIN PLATED COPPER ALLOY	0.2 X 29.5	I	I	SN	18	0.75 - 1.0	1.7 - 2.34	2.6	3	1.88	2.6	3.3
35267293	01	AC	SEE NOTE #9	102	TIN PLATED COPPER ALLOY	0.2 X 29.5	I	I	SN	15	1.25 - 1.5	1.8 - 2.4	3.1	3.9	2.2	3.1	3.8
35271146	01	AC	-	101	SILVER PLATED COPPER ALLOY	0.2 X 29.5	II	III	AG	21	0.35 - 0.5	1.2 - 1.83	2.1	2.85	1.88	2.05	3.15
35271145	01	AC	-	101	SILVER PLATED COPPER ALLOY	0.2 X 29.5	II	III	AG	18	0.75 - 1.0	1.7 - 2.34	2.6	3	1.88	2.6	3.3
35271144	01	AC	SEE NOTE #9	102	SILVER PLATED COPPER ALLOY	0.2 X 29.5	II	III	AG	15	1.25 - 1.5	1.8 - 2.4	3.1	3.9	2.2	3.1	3.8

(S) PROCESS SENSITIVE DIMENSION

DIMENSIONS ENCLOSED IN ( ) INDICATE REFERENCE DIMENSIONS AND NO TOLERANCE LIMITS ARE ESTABLISHED

DIMENSIONAL RANGE (MM)		CHART D
FROM	0	>12
TO	12	
TOLERANCE UNLESS OTHERWISE SPECIFIED	±0.1	±0.2

ANGULAR TOLERANCE ±2°

THIRD ANGLE PROJECTION

DO NOT SCALE

USE MATH DATA

NX

A ——— LINE DRAWN THROUGH A PART NUMBER INDICATES THAT PHYSICAL PARTS ARE NOT AVAILABLE FOR ORDERING.

PART NUMBERS THAT DO NOT HAVE A LINE PRESENT INDICATE THAT PHYSICAL PARTS ARE AVAILABLE FOR ORDERING.

CONTACT APTIV SALES TO ASSURE AVAILABILITY OF PARTS.

DWG TYPE: PART DRAWING

STYLE

VOLUME (CM³)

DISTR CODE

UNLESS OTHERWISE SPECIFIED

THIS DOCUMENT IS IN ACCORDANCE WITH ASME Y14.5M-1994 AS AMENDED BY THE GM GLOBAL DIMENSIONING AND TOLERANCING ADDENDUM-2001. SEPARATE PATTERNS OF FEATURES MAY BE GAGED SEPARATELY REGARDLESS OF DATUM REFERENCES.

ALL DIMENSIONS ARE IN MILLIMETERS

REFERENCE

•APTIV•

CONNECTION SYSTEMS
WARREN, OH

COPYRIGHT 2018 APTIV. ALL RIGHTS RESERVED.

THIS DRAWING IS THE PROPERTY OF APTIV AND CONTAINS APTIV CONFIDENTIAL INFORMATION. THE REPRODUCTION, DISTRIBUTION AND UTILIZATION OF THIS DOCUMENT OR ITS RELATED CAD MATH DATA, AS WELL AS COMMUNICATION OF ANY CONTENT TO OTHERS, WITHOUT EXPRESS AUTHORIZATION, IS PROHIBITED.

		DATE
DR		
APVD1	E. SHASTEEN	010CI8
APVD2	E. SHASTEEN	25JAI9
APVD3	R. SNADER	25JAI9
APVD4		
APVD5		

SUBSTANCES OF CONCERN AND RECYCLED CONTENT PER APTIV [094900]

MATERIAL: SEE CHART

DRAWING NAME: TAXI TERM M OCS 1.2 SEALED

DRAWING NUMBER: 35304662

SIZE	SCALE	FRAME NO	SHEET NO	STG	REV	N/P
A0	10:1	1 OF 1	1 OF 1	R	04	-

User: BERGER
PROJ: 35304662-OCS1.2_SEALED_04
Date: 15-May-19 Time: 15:14:10