SYMBOL DEFINITION		
A DIMENSION WITHOUT AN INSPECTION REPORT SYMBOL ( ) DOES NOT REQUIRE INSPECTION. IT MAY BE CONTROLLED ON THE INDIVIDUAL COMPONENT DRAWING.	TOTAL NO OF INSPECTIONS REQUIRED	3
	LAST NO. USED	6

MISSING SYMBOLS: 3-4 6

DWG STATUS DATE	STG	REV	N/P	CHG	ZONE	REVISION HISTORY	AUTH	DR	APVD 1	APVD 2
21JN12	R	01	-	-		15488490 - WAS SEPARATE DWG; 13960982 - RELEASED	418170	JGM	JAA	OAF
07DE12	R	02	-	-		13960982 - UPDATED PART AVAILABILITY	420171	JSM	OAF	JSM
01AU13	R	03	-	-		33109152 - RELEASED	423405	CBG	CBG	LES
28NO13	R	04	-	-		33109152 - UPDATED PART AVAILABILITY; ALL PARTS - UPDATED PDM ATTRIBUTES	424806	APB	JVM	LES
02JN16	R	05	-	-		33357583 - RELEASED	431237	JVR	JVM	ACV
19JN17	R	06	-	-		33357583 - UPDATED PART AVAILABILITY	437003	ABH	ABH	HV

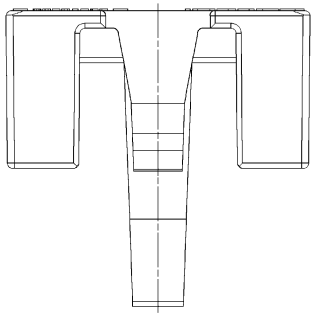

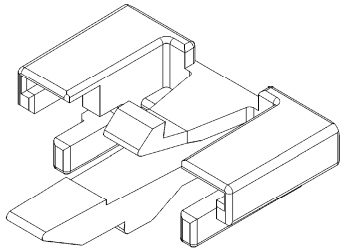

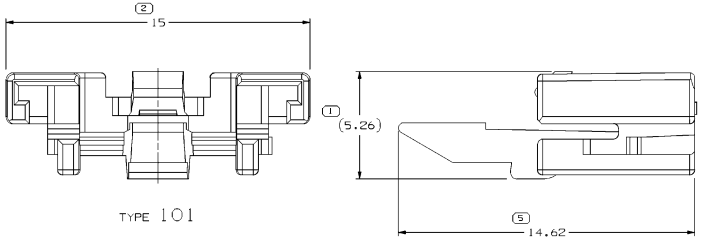

TYPE 101

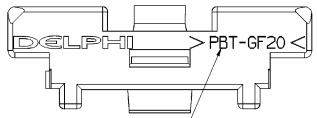

MATERIAL RECYCLING CODE OPTIONAL

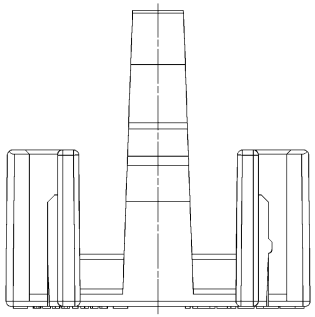

NOTES

1. UNLESS OTHERWISE SPECIFIED AND/OR INDICATED:

   DIMENSIONS ARE TO FACE OF VIEW SHOWN AND AUTOMATICALLY ROUNDED BY COMPUTER FOR INSPECTION (SEE MATH MODEL FOR PRECISE DIMENSIONS). FOR ALL OTHER DIMENSIONS NOT SHOWN BUT REQUIRED FOR TOOL BUILD, SEE MATH MODEL FOR PRECISE TOOL PATH DATA.

2. PARTS SHOWN ON THIS DRAWING USED IN ASSEMBLIES SHOWN ON TAXI 15488487.

3. MATERIAL RECYCLING CODE PER ISO 11469. (0.6)X(0.1) CHARACTERS AS SHOWN TO BE LOCATED ON ANY EXTERIOR SURFACE.

4. REFERENCE MATING COMPONENTS OR EQUIVALENT:

   CONNECTOR 13509360

5. (0.6)X(0.1) DELPHI CORPORATE BRAND TO BE LOCATED ON ANY EXTERIOR SURFACE, PREFERABLY VISIBLE AT FINAL ASSEMBLY. OPTIONAL CONSTRUCTION FOR EXISTING TOOLING MAY BE "PED".

6. THIS PRODUCT IS NOT CATEGORIZED AS AN APPEARANCE ITEM, MINOR IMPERFECTIONS INCLUDING, BUT NOT LIMITED TO, FLOW MARKS, COLOR BLEMISHES, GATE VESTIGE, AND SOFT FLASH THAT DO NOT AFFECT THE FIT, FORM, OR FUNCTION OF THE PART ARE PERMISSIBLE PER DPNP-4.7-CS-01.

PART NO	REV	N/P	TYPE	MATERIAL SPECIFICATION AND COLOR	VOLUME (CM)³
33357583	01	AA	104	POLYESTER COMPOUND RED	0.240
33109152	01	AA	103	POLYESTER COMPOUND BLACK	0.240
13960982	01	AB	102	POLYESTER COMPOUND GRAY	0.240
15488490	04	AC	101	POLYESTER COMPOUND NATURAL	0.240

5 PROCESS SENSITIVE DIMENSION

DIMENSIONS ENCLOSED IN ( ) INDICATE REFERENCE DIMENSIONS AND NO TOLERANCE LIMITS ARE ESTABLISHED

DIMENSIONAL RANGE (MM) FROM TO	>0 20	>20 30	>30 70	>70 100	>100 150	>150 200	>200 250	>250 300	>300 400
TOLERANCE UNLESS OTHERWISE SPECIFIED	±0.15	±0.2	±0.3	±0.4	±0.5	±0.6	±0.8	±1	±1.2
ANGULAR TOLERANCE ±2°									

A LINE DRAWN THROUGH A PART NUMBER INDICATES THAT PHYSICAL PARTS ARE NOT AVAILABLE FOR ORDERING.

PART NUMBERS THAT DO NOT HAVE A LINE PRESENT INDICATE THAT PHYSICAL PARTS ARE AVAILABLE FOR ORDERING.

CONTACT DELPHI SALES TO ASSURE AVAILABILITY OF PARTS.

DWG TYPE: PART DRAWING

STYLE

VOLUME (CM³): SEE CHART

DISTR CODE

UNLESS OTHERWISE SPECIFIED

THIS DOCUMENT IS IN ACCORDANCE WITH ASME Y14.5M-1994 AS AMENDED BY ASME Y14.5M-1994 ADDENDUM 1 AND TOLERANCING ADDENDUM-2001. SEPARATE PATTERNS OF FEATURES MAY BE BASED SEPARATELY REGARDLESS OF DATUM REFERENCES.

ALL DIMENSIONS ARE IN MILLIMETERS

REFERENCE

THIRD ANGLE PROJECTION

DO NOT SCALE

USE MATH DATA

CAD NX

DELPHI

DELPHI PACKARD ELECTRICAL/ELECTRONIC ARCHITECTURE
WARREN, OH

COPYRIGHT 2012 DELPHI CORPORATION AND/OR ITS AFFILIATES.
ALL RIGHTS RESERVED.
REVISED 2017
THIS DRAWING IS THE PROPERTY OF DELPHI CORPORATION AND CONTAINS DELPHI CONFIDENTIAL INFORMATION. THE REPRODUCTION, DISTRIBUTION AND UTILIZATION OF THIS DOCUMENT OR ITS RELATED CAD MATH DATA, AS WELL AS COMMUNICATION OF ANY CONTENT TO OTHERS, WITHOUT EXPRESS AUTHORIZATION, IS PROHIBITED.

DR	DATE
APVD1 JESSICA GARCIA M.	21JN12
APVD2 J.S. ALVARADO	21JN12
APVD3 OSCAR A. FONSECA	21JN12
APVD4	
APVD5	

SUBSTANCES OF CONCERN AND RECYCLED CONTENT PER DELPHI 10949001

MATERIAL: SEE CHART

DRAWING NAME: TAXI LOCK CPA

DRAWING NUMBER: 13963937

SIZE	SCALE	FRAME NO	SHEET NO	STG	REV	N/P
A1	10:1	1 OF 1	1 OF 1	R		-

Part: 13963937 Dwg: 13963937-A0001-A01 Date: 13-Jun-17 Time: 17:21 Tolerance: Standard