SYMBOL DEFINITION		
A DIMENSION WITHOUT AN INSPECTION REPORT SYMBOL ( ) DOES NOT REQUIRE INSPECTION. IT MAY BE CONTROLLED ON THE INDIVIDUAL COMPONENT DRAWING.	TOTAL NO OF INSPECTIONS REQUIRED	32
	LAST NO. USED	30

MISSING SYMBOLS

15 21 23 25

DWG STATUS					ZONE	REVISION HISTORY	AUTH	DR	APVD1	APVD2
DATE	STG	REV	N/P	CHG						
17NO17	R	01	-	-		ALL PARTS - RELEASED	437648	JVM	JVM	RBS
02AU18	R	02	-	-		ALL PARTS - UPDATED PDM ATTRIBUTES; 35080798-99 - UPDATED VALUES ON B_4 COLUMN	440513	DAV	JAA	LES
29OC18	R	03	-	-		ALL PARTS - UPDATED PART AVAILABILITY	441421	CGD	CGD	RBS
10FE20	R	04	-	-		35412745 - RELEASED; 35080799 - CABLE SIZE WAS 0.35 - 0.5 AND CABLE DIAMETER 1.2 - 1.83	550796	JGO	GLG	RBS
04JN20	R	05	-	-		35412745 - B_2 WAS 1.8 AND (H_1) WAS 1.8	551618	LGD	JAA	RBS
15JL20	R	06	-	-		35412745 - UPDATED PART AVAILABILITY	551994	JLL	JAA	RBS

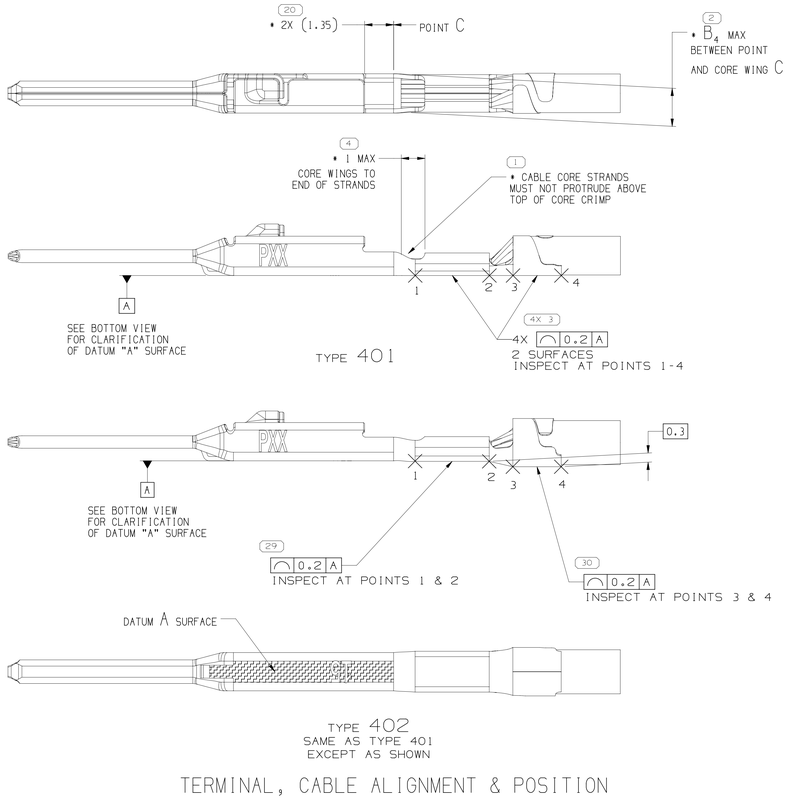

TERMINAL, CABLE ALIGNMENT & POSITION

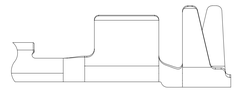

TYPE 402
SAME AS TYPE 401
EXCEPT AS SHOWN

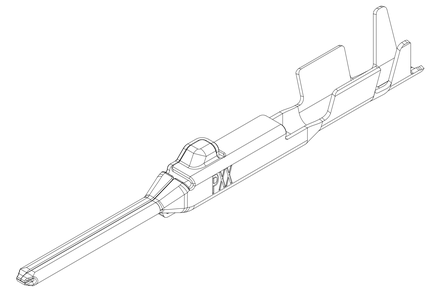

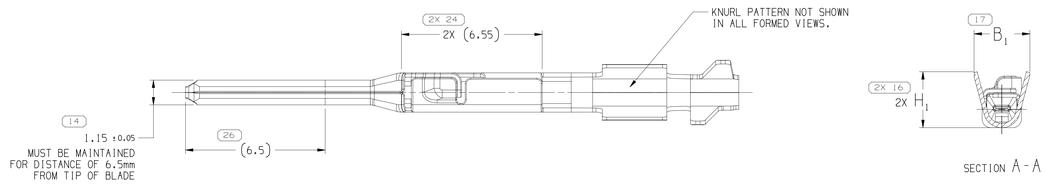

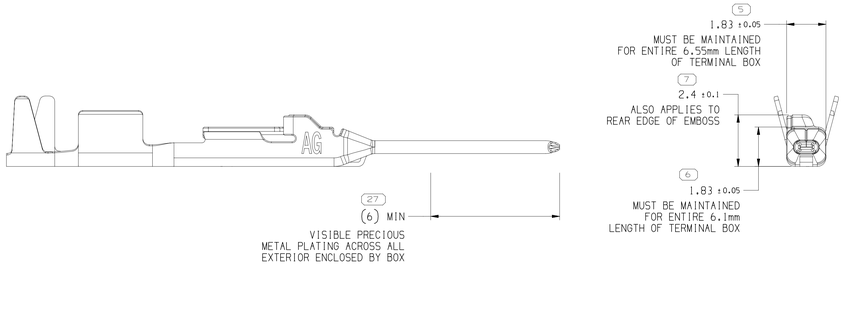

TYPE 401

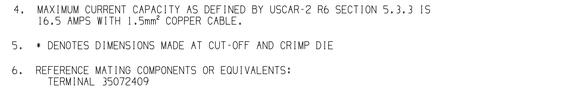

NOTES

1. UNLESS OTHERWISE SPECIFIED AND/OR INDICATED:

   DIMENSIONS ARE TO FACE OF VIEW SHOWN AND AUTOMATICALLY ROUNDED BY COMPUTER FOR INSPECTION (SEE MATH MODEL FOR PRECISE DIMENSIONS). FOR ALL OTHER DIMENSIONS NOT SHOWN BUT REQUIRED FOR TOOL BUILD, SEE MATH MODEL FOR PRECISE TOOL PATH DATA.

2. FOR TYPE 401 WITH CABLE SIZES UP TO 1.9mm O.D.; MAXIMUM INSULATION CRIMP WIDTH OF 1.9mm AND HEIGHT 1.9mm; MAXIMUM CORE CRIMP WIDTH IS 1.9mm.

   FOR TYPE 401 WITH CABLE SIZES GREATER THAN 1.9mm BUT LESS THAN 2.34mm O.D.; MAXIMUM INSULATION CRIMP WIDTH OF 2.25mm AND HEIGHT 2.35mm; MAXIMUM CORE CRIMP WIDTH IS 1.9mm

   FOR TYPE 402 WITH CABLE SIZES UP TO 2.4mm O.D.; MAXIMUM INSULATION CRIMP WIDTH OF 2.6mm AND HEIGHT 2.6mm; MAXIMUM CORE CRIMP WIDTH IS 1.9mm

3. PLATING TYPE:

   I. REFLOW TIN 1.9 - 3.3 MICROMETERS THICK OVER NICKEL UNDERPLATE 0.13 - 0.5 MICROMETERS THICK.

   II. SILVER 1.0 - 2.0 MICROMETERS THICK OVER NICKEL UNDERPLATE 0.127 - 0.254 MICROMETERS THICK.

   III. MATTE TIN 1.9 - 7.0 MICROMETERS THICK OVER NICKEL UNDERPLATE 0.127 - 0.254 MICROMETERS THICK. (FOR USE WITH SELECTIVE SILVER PLATING SPECIFICATION)

   PLATING TYPE INFORMATION SHOWN ABOVE IS REFERENCE ONLY. PLATING REQUIREMENTS ARE CONTAINED IN APPLICABLE MATERIAL SPECIFICATION.

4. MAXIMUM CURRENT CAPACITY AS DEFINED BY USCAR-2 R6 SECTION 5.3.3 IS 16.5 AMPS WITH 1.5mm² COPPER CABLE.

5. * DENOTES DIMENSIONS MADE AT CUT-OFF AND CRIMP DIE

6. REFERENCE MATING COMPONENTS OR EQUIVALENTS:
   TERMINAL 35072409

7. PARTS MEET THE PERFORMANCE REQUIREMENTS OF GMW3191 JUNE 2012 AND SAE/USCAR-2 R6 REVISION FOR THE FOLLOWING CLASSIFICATIONS:

   TEMPERATURE CLASS 3 (-40° TO 125° C)
   VIBRATION CLASS 1 (ON BODY OR CHASSIS)
   SEALING CLASS 1 (UNSEALED) FOR CABLE I.D. 25 & 15
   SEALING CLASS 2 OR 3 (SEALED CONNECTOR DEPENDENT) FOR CABLE I.D. 21 & 18

8. FOR TERMINALS PACKAGED & STORED IN THE APPROVED MANNER, TARNISH ON SILVER PLATED SURFACES WILL NOT AFFECT THE PERFORMANCE OF THE PART.

9. 15 CABLE I.D. P/N IS NOT APPROVED FOR USE IN SUMITOMO CONNECTOR HOUSINGS - THE TERMINAL-CONNECTOR POLARIZATION FEATURE IN THE CONNECTOR CAVITY DOES NOT MEET REQUIREMENTS.

PART NUMBER	REV	N/P	CABLE I.D. STATUS	TYPE	MATERIAL SPECIFICATION	MATERIAL SIZE	CONTACT AREA PLATING TYPE (SEE NOTE 3)	CRIMP AREA PLATING TYPE (SEE NOTE 3)	CONTACT PLATING I.D.	CABLE I.D.	CABLE SIZE (mm²)	CABLE DIAMETER	B_1 ±0.15	B_2 ±0.25	B_4	(H_1)	(H_2)
35080800	01	AB	-	401	AG PLATED COPPER ALLOY	0.2	II	III	AG	25	0.13 - 0.22	0.81 - 1.2	1.5	1.8	1.88	1.4	1.8
35412745	01	AB	-	401	AG PLATED COPPER ALLOY	0.2	II	III	AG	22	0.35	1.2 - 1.7	1.85	2.85	1.88	1.75	3.15
35080799	01	AC	-	401	AG PLATED COPPER ALLOY	0.2	II	III	AG	21	0.5	1.4 - 1.9	2.1	2.85	1.88	2.05	3.15
35080798	01	AB	-	401	AG PLATED COPPER ALLOY	0.2	II	III	AG	18	0.75 - 1.0	1.7 - 2.34	2.6	3	1.88	2.6	3.3
35080797	01	AB	SEE NOTE #9	402	AG PLATED COPPER ALLOY	0.2	II	III	AG	15	1.25 - 1.5	1.8 - 2.4	3.1	3.9	2.2	3.1	3.8
											COPPER						

A LINE DRAWN THROUGH A PART NUMBER INDICATES THAT PHYSICAL PARTS ARE NOT AVAILABLE FOR ORDERING.

PART NUMBERS THAT DO NOT HAVE A LINE PRESENT INDICATE THAT PHYSICAL PARTS ARE AVAILABLE FOR ORDERING.

CONTACT APTIV SALES TO ASSURE AVAILABILITY OF PARTS.

DWG TYPE: PART DRAWING

STYLE

VOLUME (CM³)

DISTR CODE: D

UNLESS OTHERWISE SPECIFIED

THIS DOCUMENT IS IN ACCORDANCE WITH ASME Y14.5M-1994 AS AMENDED BY THE GM GLOBAL DIMENSIONING AND TOLERANCING ADDENDUM-2001. SEPARATE PATTERNS OF FEATURES MAY BE GAGED SEPARATELY REGARDLESS OF DATUM REFERENCES.

ALL DIMENSIONS ARE IN MILLIMETERS

(5) PROCESS SENSITIVE DIMENSION

REFERENCE

DIMENSIONS ENCLOSED IN ( ) INDICATE REFERENCE DIMENSIONS AND NO TOLERANCE LIMITS ARE ESTABLISHED

DIMENSIONAL RANGE (MM)		CHART D
FROM	0	> 12
TO	12	
TOLERANCE UNLESS OTHERWISE SPECIFIED	±0.1	±0.2
ANGULAR TOLERANCE ±2°		

THIRD ANGLE PROJECTION

DO NOT SCALE

USE MATH DATA

NX

APTIV

CONNECTION SYSTEMS
WARREN, OH

COPYRIGHT 2017 APTIV. ALL RIGHTS RESERVED.

THIS DRAWING IS THE PROPERTY OF APTIV AND CONTAINS APTIV CONFIDENTIAL INFORMATION. THE REPRODUCTION, DISTRIBUTION AND UTILIZATION OF THIS DOCUMENT OR ITS RELATED CAD MATH DATA, AS WELL AS COMMUNICATION OF ANY CONTENT TO OTHERS, WITHOUT EXPRESS AUTHORIZATION, IS PROHIBITED.

		DATE
DR		
APVD1	J. VILLAMIL	17NO17
APVD2	J. VILLAMIL	17NO17
APVD3	ROBERT B. SNADER	17NO17
APVD4		
APVD5		

SUBSTANCES OF CONCERN AND RECYCLED CONTENT PER APTIV 10949001

MATERIAL: SEE CHART

DRAWING NAME: TAXI TERM M OCS 1.2

DRAWING NUMBER: 33101338

SIZE	SCALE	FRAME NO	SHEET NO	STG	REV	N/P
A0	10:1	1 OF 1	4 OF	R	06	-

User: LGD76
Page: 33101338.CD01.SHEET4
Date: 21-Jul-20 Time: 10:36:52