SYMBOL DEFINITION			MISSING SYMBOLS
A DIMENSION WITHOUT AN INSPECTION REPORT SYMBOL (□) DOES NOT REQUIRE INSPECTION. IT MAY BE CONTROLLED ON THE INDIVIDUAL COMPONENT DRAWING.	TOTAL NO OF INSPECTIONS REQUIRED	21	7-9
	LAST NO. USED	19	

DWG STATUS DATE	STR	REV	N/P	CHG	ZONE	REVISION HISTORY	AUTH	DR	APVD I.T.E.	APVD
11JAN05	R	01	-	-	-	PD CREATED	263214	BRB	BRB	JCU
29FEB05	R	01	AA	-	-	ADDED GD & T DIMENSIONS; ADDED KPC CHART; REVISED NOTES; REVISED PROCESS SENSITIVE DIMENSION - WAS DIM #5	265364	AK	AK	JCU
17MAY05	R	01	AB	-		13.4 ±0.3 WAS 13.4	267472	GPS	JKA	RWF

KEY PRODUCT CHARACTERISTICS			
SAFETY/COMPLIANCE	FIT/FUNCTION	TOTAL ON DRAWING	1
F/C CHECKPOINTS	F/F CHECKPOINTS	LAST NO. USED	1

NO & TYPE	DESCRIPTION	RATIONALE	PTS	ZONE
1 F/F	DIMENSION	CONTROL FIT DIMENSION	-	F13

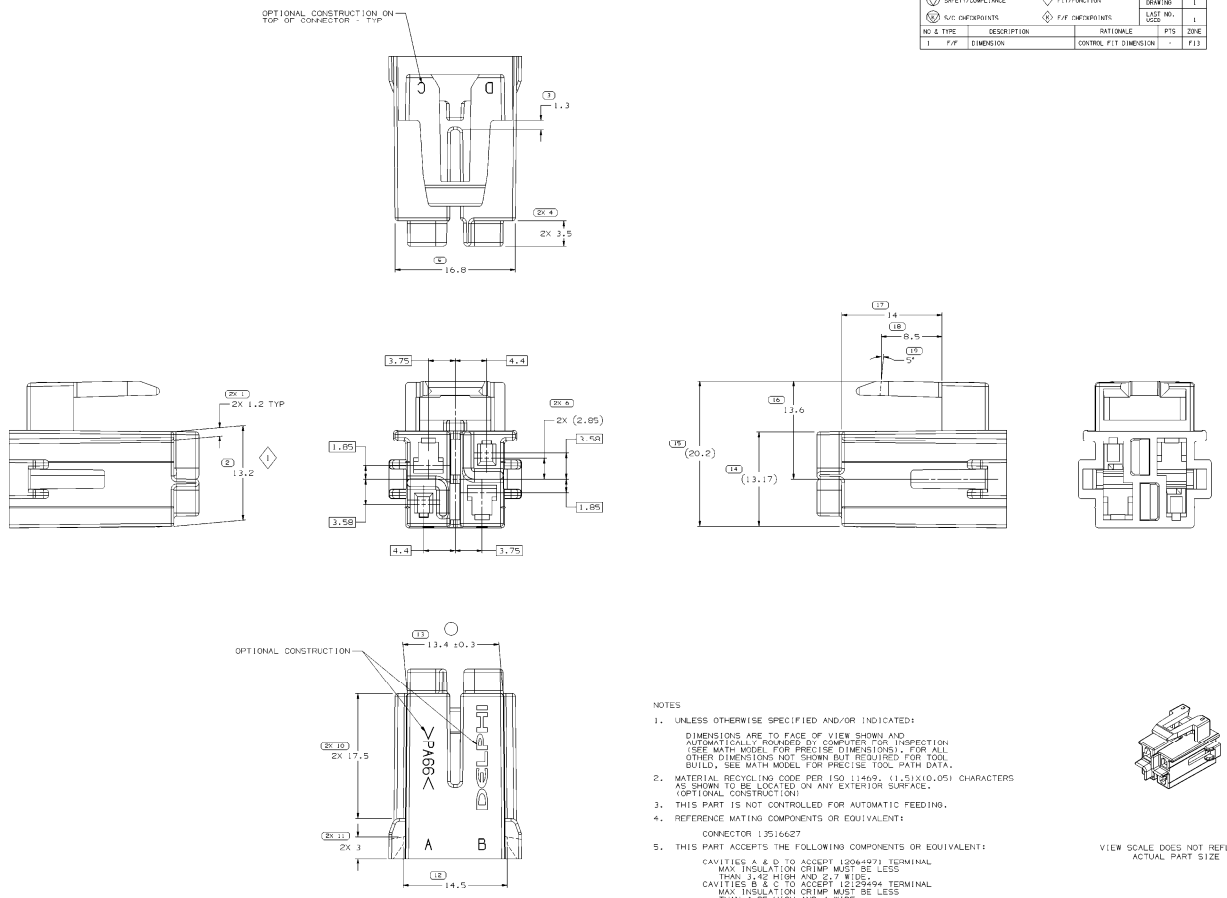

NOTES

1. UNLESS OTHERWISE SPECIFIED AND/OR INDICATED:

   DIMENSIONS ARE TO FACE OF VIEW SHOWN AND AUTOMATICALLY ROUNDED BY COMPUTER FOR INSPECTION (SEE MATH MODEL FOR PRECISE DIMENSIONS). FOR ALL OTHER DIMENSIONS NOT SHOWN BUT REQUIRED FOR TOOL BUILD, SEE MATH MODEL FOR PRECISE TOOL PATH DATA.

2. MATERIAL RECYCLING CODE PER ISO 11469. (1.51X(0.05) CHARACTERS AS SHOWN TO BE LOCATED ON ANY EXTERIOR SURFACE. (OPTIONAL CONSTRUCTION)

3. THIS PART IS NOT CONTROLLED FOR AUTOMATIC FEEDING.

4. REFERENCE MATING COMPONENTS OR EQUIVALENT:

   CONNECTOR 13516627

5. THIS PART ACCEPTS THE FOLLOWING COMPONENTS OR EQUIVALENT:

   CAVITIES A & D TO ACCEPT 12064971 TERMINAL
   MAX INSULATION CRIMP MUST BE LESS THAN 3.42 HIGH AND 2.7 WIDE.
   CAVITIES B & C TO ACCEPT 12129494 TERMINAL
   MAX INSULATION CRIMP MUST BE LESS THAN 4.85 HIGH AND 4 WIDE.
   CONNECTOR POSITION ASSURANCE LOCK 12092873
   TERMINAL POSITION ASSURANCE LOCK 13517800

6. (1.51X(0.05) DELPHI CORPORATE BRAND TO BE LOCATED ON ANY EXTERIOR SURFACE, PREFERABLY VISIBLE AT FINAL ASSEMBLY. (OPTIONAL CONSTRUCTION)

VIEW SCALE DOES NOT REFLECT ACTUAL PART SIZE

DWG TYPE	PART DRAWING
TITLE	
VOLUME (CM³)	2.585
SYSTEM CODE	

UNLESS OTHERWISE SPECIFIED
THIS DOCUMENT IS IN ACCORDANCE WITH ASME Y14.5M-1994 UNLESS OTHERWISE SPECIFIED. THIS DOCUMENT IS PROPRIETARY TO DELPHI AND CONTAINS INFORMATION OF PROPERTIES WHICH MAY BE REVISED PERIODICALLY. REPRODUCTION OF THIS DOCUMENT IS PROHIBITED.

ALL DIMENSIONS ARE IN MILLIMETERS

(2) PROCESS SENSITIVE DIMENSION

REFERENCE

NUMERICAL RANGE (MM)												
FROM	0.2	0.5	1.0	2.0	>10	>100	>200	>300	>500	>1000	>1500	>2000
TO	2.0	3.0	5.0	10.0	100	200	300	500	1000	1500	2000	4000
ALLOWANCE (MM)												
±0.15	±0.2	±0.3	±0.5	±0.8	±1.2	±2.0	±3.0	±4.0	±5.0	±6.0	±8.0	±12.0

ANGLE ALLOWANCE ±0°

THIRD ANGLE PROJECTION

DO NOT SCALE

USE MATH DATA

DELPHI

DELPHI PACKARD ELECTRIC SYSTEMS
WARREN, OH

DR	DATE
APVD1 BARRY BURNS	11JAN05
APVD2 BARRY BURNS	11JAN05
APVD3 J.C.LIBRERA	11JAN05
APVD4	
APVD5	

SUBSTANCES OF CONCERN AND RECYCLED CONTENT PER DELPHI 12999001

MATERIAL
W25A200: PA66 HS IN BLK

DRAWING NAME
CONN 4 F M/P 150 290

DRAWING NUMBER
13517799

SIZE	SCALE	FRAME NO	SHEET NO	RTN	REV	NPT
AD	5:1	1 OF 1	1 OF 1	R	01	AB