D

THIS DRAWING AND DESIGN HEREON CONSTITUTES A PROPRIETARY DESIGN OF PACKARD ELECTRIC DIVISION AND IS NOT TO BE REPRODUCED OR TRANSFERRED WITHOUT AUTHORITY OF PACKARD ELECTRIC DIVISION.

DO NOT SCALE

PART NO. 1205 9573

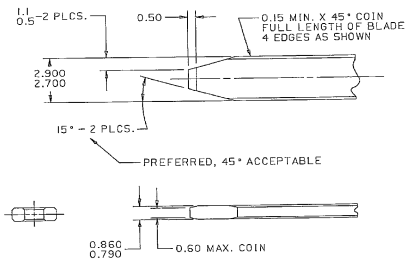

MATING TERMINAL INFORMATION

SCALE 8:1

RECOMMENDED MATERIAL: P-1546 (CA 210) BRASS-EXTRA SPRING TEMPER - TIN PLATED.

PLATING THICKNESS: 0.003 - 0.005 MM.

TENSILE STRENGTH: 430 - 480 MPA.

USE OF MATERIAL WITH CONDUCTIVITY ≤20% IACS AT 68°F SHOULD BE APPROVED BY PACKARD ELECTRIC.

PART NO. 1205 9573

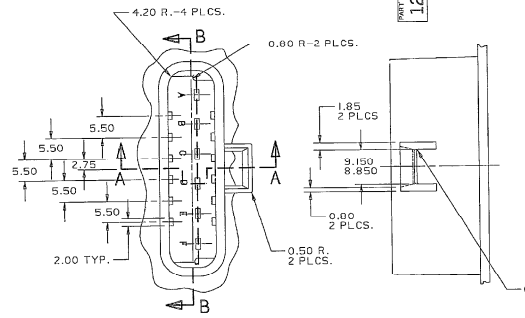

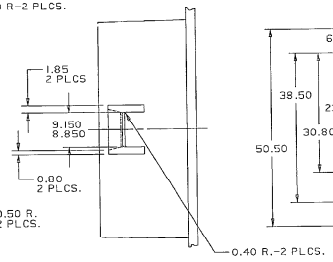

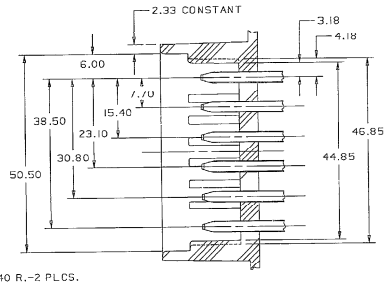

SECTION B-B

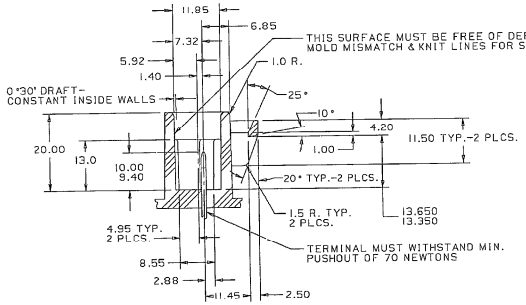

SECTION A-A

MATING CONNECTOR INFORMATION

NOTES — 1. 1° DRAFT ON ALL SURFACES UNLESS OTHERWISE SPECIFIED.

2. DIMENSIONS ARE TO FACE OF VIEW SHOWN UNLESS OTHERWISE SPECIFIED.

3. ALL RADII 0.40 UNLESS OTHERWISE SPECIFIED.

RECOMMENDED MATERIAL — GLASS FILLED POLYESTER OR TYPE 6 NYLON.

NOTES — 1. CAVITIES TO ACCEPT 12077412 TERMINAL OR EQUIVALENT.

2. THIS ASSEMBLY TO ACCEPT 12059195 SECONDARY TERMINAL LOCK OR EQUIVALENT.

3. THIS ASSEMBLY TO ACCEPT C.P.A. LOCK 12052834.

4. THIS ASSEMBLY MATES TO DELCO PRODUCTS PART NO. 22062394 OR EQUIVALENT.

5. THIS ASSEMBLY TO ACCEPT CABLE SEAL 12015323 OR EQUIVALENT.

6. WHEN PARTS ARE SHIPPED, THEY MUST BE PACKED IN PLASTIC BAGS OR SHIPPING CONTAINERS MUST BE LINED WITH PLASTIC LINERS. BAGS OR LINERS MUST BE SEALED TO AVOID ENTRY OF FOREIGN MATTER.

7. SEALING CODE 3.

C04DE016

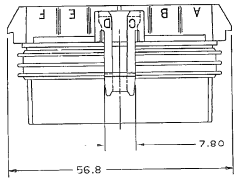

C

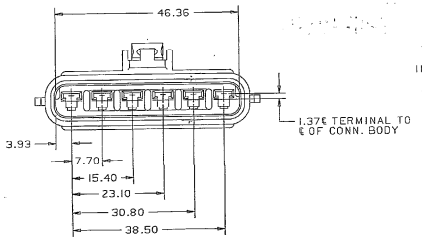

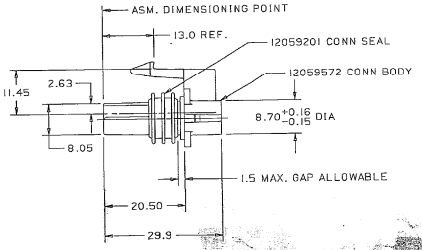

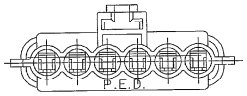

DATE	SYM	REVISION RECORD	AUTH	DR	CK
02DE85	A	CAVITY LETTERS & NOTES ADDED	—	—	—
02DE85	—	RELEASED.	85005	JP.	FH
15OC86	—	8.70 ±.16 DIA. WAS 8.70 DIA. ON 12059572 CONNECTOR	109562	SM	FH
15SE87	—	ADDED NOTE #7.	115423	JP	FH
17FE88	B	ADHESIVE ADDED	118462	DC	FH
05JA89	B1	12077412 TERMINAL WAS 12034454 IN NOTE #1.	890005	TLO	BAB
31JL89	B2	REVISED LOCK ARM	128104	FH	JH
18FE93	C	REMOVED ADHESIVE NOTE	153986	GL	GL

PACKARD ELECTRIC DIVISION
GENERAL MOTORS CORPORATION
WARREN, OHIO

METRIC
DIMENSIONS ARE IN MILLIMETERS UNLESS OTHERWISE SPECIFIED

THIRD ANGLE PROJECTION

CODE NO. 6900	TOLERANCE UNLESS OTHERWISE SPECIFIED DECIMAL: ONE PLACE ± 0.3 TWO PLACE ± 0.15 ANGULAR ± 2°
QC-C-5110	
DWG. DATE 02AU85	SCALE 2:1
CD.A. 12059573	DR. G. Parker 02DE85
REFERENCE NO. 12040753	CK. F.HESTON DATE 09DE85
	APPR. R.MAGA DATE 10DE85
MATERIAL SPEC. SEE DRAWING	APPR. T.CUNNINGHAM DATE 10DE85
NAME ASM CONN 6F M/P 280	
PART NO. 1205 9573	SIZE D

PACKARD ELECTRIC