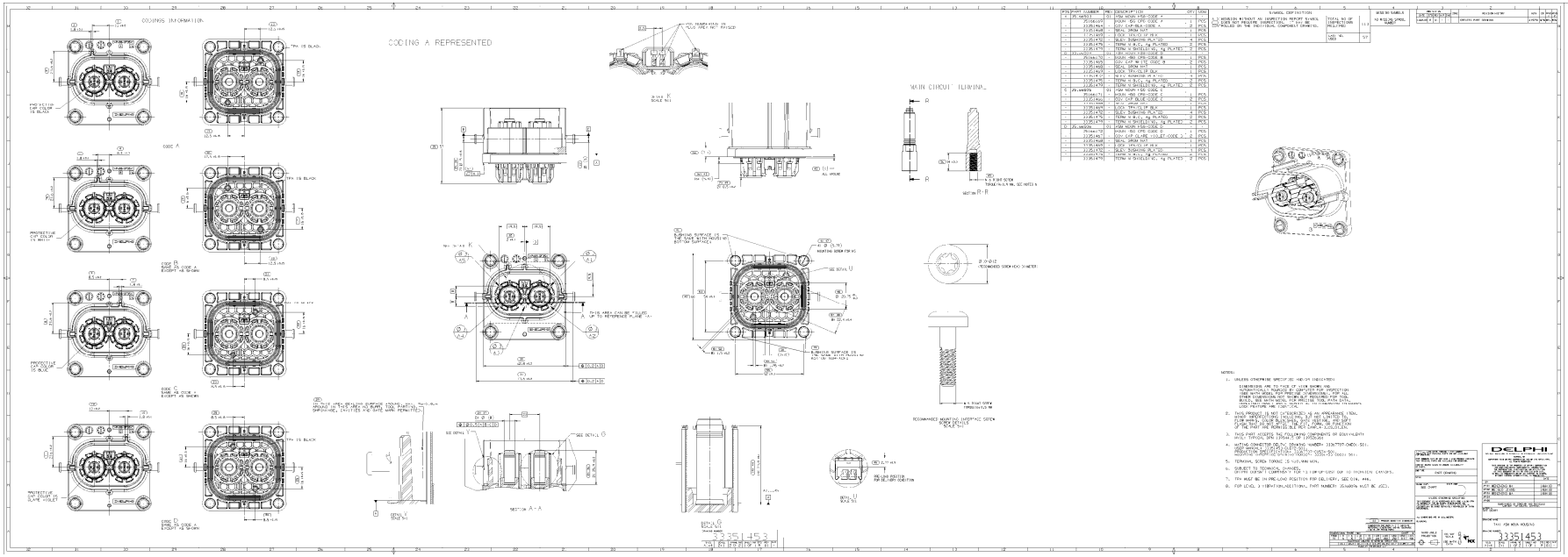


ITEM	PART NUMBER	REV	DESCRIPTION	QTY	UNIT
1	29		HOUSING	1	PCS
2	3351453		COVER	1	PCS
3	3351454		SEAL	1	PCS
4	3351455		TERMINAL	4	PCS
5	3351456		SCREW	4	PCS
6	3351457		WASHER	4	PCS
7	3351458		NUT	4	PCS
8	3351459		SEAL	1	PCS
9	3351460		TERMINAL	1	PCS
10	3351461		SEAL	1	PCS
11	3351462		TERMINAL	1	PCS
12	3351463		SEAL	1	PCS
13	3351464		TERMINAL	1	PCS
14	3351465		SEAL	1	PCS
15	3351466		TERMINAL	1	PCS
16	3351467		SEAL	1	PCS
17	3351468		TERMINAL	1	PCS
18	3351469		SEAL	1	PCS
19	3351470		TERMINAL	1	PCS
20	3351471		SEAL	1	PCS
21	3351472		TERMINAL	1	PCS
22	3351473		SEAL	1	PCS
23	3351474		TERMINAL	1	PCS
24	3351475		SEAL	1	PCS
25	3351476		TERMINAL	1	PCS
26	3351477		SEAL	1	PCS
27	3351478		TERMINAL	1	PCS

PANEL CERTIFICATE
A_1 DEVIATION WITHOUT AN INSPECTION REPORT ALWAYS NEEDS NEW PROCESS, MEASUREMENT AND TEST RESULTS ON THE INDIVIDUAL COMPONENT CHARACTER.

TYPICAL NO OF INSPECTIONS REQUIRED	11.5
TOTAL NO OF CHARACTERS REQUIRED	57

WEIGHT SAMPLE
10 PCS (0.5KG APPROX)

REVISION HISTORY							
DATE	DESCRIPTION	ECN	BY	CHECKED	APPROVED
04/08/14	A	1		DRAWING RELEASED			

PART NUMBER	3351453
PART REVISION	A
DRAWN BY	
DRAWN DATE	
CHECKED BY	
CHECKED DATE	
APPROVED BY	
APPROVED DATE	

DESCRIPTION	THU 150 MCA HOUSING
PART NUMBER	3351453
REVISION	A
SHEET	1 OF 1

3351453