SYMBOL DEFINITION		
A DIMENSION WITHOUT AN INSPECTION REPORT SYMBOL DOES NOT REQUIRE INSPECTION. IT MAY BE CONTROLLED ON THE INDIVIDUAL COMPONENT DRAWING.	TOTAL NO OF INSPECTIONS REQUIRED	2
	LAST NO. USED	2

MISSING SYMBOLS
NO MISSING SYMBOL NUMBER

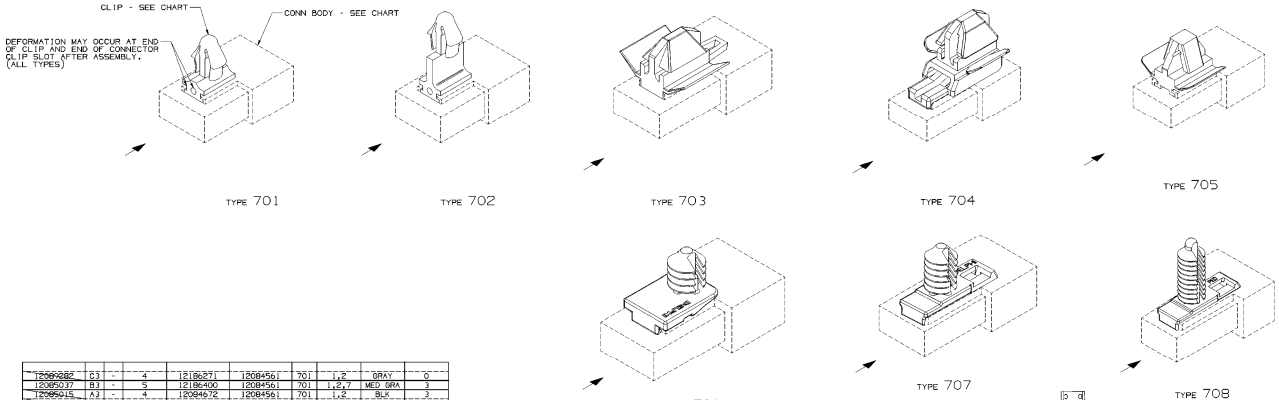

CONN BODY & CLIP ASM	REV	N/P	CAVITY	CONN BODY	CLIP	TYPE	ASM NOTES	COLOR	SEALING CODE
12089282	G3	-	4	12186271	12084561	701	1,2	GRAY	0
12085037	B3	-	5	12186400	12084561	701	1,2,7	MED GRA	3
12085015	A3	-	4	12064672	12084561	701	1,2	BLK	3
12084922	A	-	3	12052844	12084561	701	1,2	BLK	3
12084470	C3	-	2	12059252	12084561	701	1,2,7	RED	0
12084256	B3	-	8	12045688	12084561	701	1,2,7	BLK	0
12078169	D2	AC	10	12064770	08905563	701	1,2,7	CRM	0
12078168	A3	-	10	12064872	08905563	701	1,2,7	BLU	0
12077442	B3	-	2	12077917	12084561	701	1,2	YEL	0
12077777	A3	-	8	12064767	08905563	701	1,2,7	BLU	0
12077272	A3	-	8	12047933	08905563	701	1,2	LT GRA	0
12066798	B4	-	1	12077786	12084561	701	1,2,7	BLK	0
12066439	A3	-	3	12066437	08905563	701	1,2	BLU	0
12066400	B3	-	3	15300003	12084561	701	1,2,7	BLK	3
12066387	D3	AA	2	12064750	15355107	701	1,2,7	BLK	0
12066351	A3	-	8	12066195	08905563	701	1,2,7	BLK	0
12065781	A3	-	6	12064763	08905563	701	1,2,7	GRA	0
12065682	A	-	2	12064868	12015423	702	1,2	NAT	0
12065658	A3	-	4	12064761	08905563	701	1,2,7	BLK	0
12065657	A3	-	4	12064761	12015423	702	1,2,7	BLK	0
12065654	A3	-	3	12064759	08905563	701	1,2,7	BLK	0
12065653	B	-	6	12064754	12084561	701	1,2	BLK	0
12065652	A3	-	1	12059885	08905563	701	1,2,7	BLK	-
12065651	A3	-	2	12052833	08905563	701	1,2,7	BLK	0
12065650	A3	-	2	12052833	12015423	702	1,2	BLK	0
12065649	B	-	2	12052847	12084561	701	1,2	BLK	3
12065648	A3	-	10	12052189	08905563	701	1,2,7	GRA	3
12065496	B	-	6	12052849	12084561	701	1,2	BLK	3
12064778	B3	-	2	12059254	12084561	701	1,2,7	LT GRN	0
12059984	B3	-	4	12034295	12084561	701	1,2	BLK	0
12059449	B4	-	2	12059250	12084561	701	1,2,7	CRM	0
12059246	A3	-	5	12052486	08905563	701	1,2,7	GRA	3
12058750	A3	-	8	12041255	12015423	702	1,2	BLK	0
12058649	B	-	2	12052848	12084561	701	1,2	GRA	-
12058469	B3	-	15	12031139	12084561	701	1,2,7	BLK	0
12058454	A3	-	8	12047931	08905563	701	1,2,7	BLK	-
12048458	B4	-	3	12047782	12084561	701	1,2,7	BLK	3
12048457	B3	-	2	12047663	12084561	701	1,2,7	BLK	0
12046711	B3	-	6	12010975	12084561	701	1,2	BLK	3
12034605	A3	-	4	06294544	08905563	701	1,2	BLK	0
12034297	B3	-	4	12020830	12084561	701	1,2,7	BLK	3
12034154	A	-	1	08911388	08905563	701	1,2	BRN	-
12034121	A3	-	2	08905117	08905563	701	1,2,7	BLK	0
12034105	B	-	4	12010974	12084561	701	1,2	BLK	-
12033963	A3	-	3	12020398	8905563	701	1,2,7	BLK	0
12028640	A	-	4	06294544	08905563	701	1,2	BLK	-
12026129	B3	-	8	12041255	12084561	701	1,2	BLK	0
12020425	B3	-	3	12010717	12084561	701	1,2,7	BLK	0
12020422	B3	-	3	12015460	12084561	701	1,2,7	BLU	3
12020421	B3	-	3	12010791	12084561	701	1,2	NAT	3
12020394	B3	-	7	12041254	12084561	701	1,2	BLK	0
12015454	B3	-	2	12010973	12084561	701	1,2,7	BLK	0
12015159	A	-	3	08900421	08905563	701	1,2	BLK	0
12015461	A3	-	13	12020819	08905563	701	1,2	BLK	0
12004674	B	-	3	08900717	08905563	701	1,2	BLK	-
12004100	B3	-	2	08917545	12084561	701	1,2	BLK	0
12004026	B3	-	4	08917541	12084561	701	1,2	BLK	0
08917738	B3	-	1	08917580	12084561	701	1,2	BLK	0
08917522	A4	-	13	08091727 2	08905563	701	1,2,7	BLK	0
08917158	A	-	3	02989914	08905563	701	1,2	BLK	0
08917080	A3	-	3	02984887	08905563	701	1,2,7	BLK	0
08911351	B3	-	2	06288545	08905563	701	1,2	BLK	0
08905636	A	-	2	02977128	02984811	701	1,2	NAT	-
08905282	A	-	2	08900635	08905563	701	1,2	BLK	-
08900219	A	-	3	08900717	02984811	701	1,2	BLK	-
08900421	A3	-	1	08900420	08905563	701	1,2	BLK	0
08900122	A	-	6	02973903	02984811	701	1,2	NAT	-
06294761	BN	-	6	02977042	02984811	701	1,2	NAT	-
06294100	BP	-	6	06288700	08905563	701	1,2	BLK	0
06288736	BN	-	7	02977043	02984811	701	1,2	NAT	-
06288294	BP	-	3	02984678	08905563	701	1,2	BLK	-
02989621	BP3	-	2	02984883	08905563	701	1,2	BLK	0
02984956	BP	-	4	02977049	08905563	701	1,2	NAT	-
02984941	BP3	-	1	02984529	08905563	701	1,2	BLK	0

PART NO	REV	N/P	CAVITY	CONN BODY	CLIP	TYPE	ASM NOTES	COLOR	SEALING CODE
13865895	01	AB	4	12052523	13613163	706	1,2,7	BLK	-
13854497	01	-	16	15336224	13613163	706	1,2	BLK	-
13854492	01	-	9	13854491	15401328	704	1,4,7	BLK	3
13843946	02	AA	8	13865740	15401328	704	1	BLK	-
13834719	02	AA	10	13865723	15401328	704	1	CRM	-
13755367	01	-	2	12160816	15318012	707	1,2	YEL	-
13755361	01	-	4	15336476	12186353	708	1	YEL	-
13755366	01	-	6	12064763	08905563	701	1,2,7	GRA	-
13755365	01	-	10	15324758	08905563	701	1,2,7	BLK	-
13755364	01	-	3	12045681	08905563	701	1,2,7	BLK	-
13755360	01	-	2	12129155	15318012	707	1,2	BLK	0
13722980	01	-	2	15326678	12186353	708	1	BLK	-
13723342	01	AB	6	15326833	12186353	708	1	BLK	-
13723341	01	AA	4	15422934	15401328	704	1	YEL	0
13722966	01	AC	2	15355466	15318012	707	1	BLK	3
13722965	01	AC	4	15326820	15401328	704	1,2	BLK	-
13722825	01	AA	4	15424636	15401328	704	1	YEL	-
13722824	01	AA	1	12160894	15401328	704	1	BLK	-
13722821	01	AA	4	15336476	15401328	704	1	YEL	-
13722820	01	AA	16	15336224	15401328	704	1	BLK	-
13722812	01	AA	2	15323130	15401328	704	1	BLK	-
13722811	01	AB	2	15326806	15401328	704	1	BLK	-
13722810	01	AB	2	15310099	15401328	704	1	BLK	-
13722809	01	AB	8	15326840	15401328	704	1	BLK	-
13722426	01	AA	12	15336209	15427170	703	1	BLK	-
13715131	01	AC	2	12047663	13613163	706	1,2	BLK	-
13630297	01	AA	8	15459916	12084561	701	1,2,7	BLK	-
13516626	01	AA	12	15336209	12186089	705	1,2,7	BLK	0
13513962	01	AB	8	12065396	08905563	701	1,2,7	CRM	-
15496768	01	AB	9	15440271	15401328	704	1,2,7	BLK	3
15486364	01	AA	2	12047663	15401328	704	1,4,7	BLK	0
15452716	01	AB	8	15412350	12084561	701	1,2,7	GRA LT	0
15449359	01	AB	4	15336476	12084561	701	1,3,7	YEL	-
15448420	02	AA	5	15326897	15427170	703	1,3,7	BLK	0
15443306	02	AC	2	12110900	12084561	701	1,2,7	YEL	0
15441422	01	AB	8	15323150	12084561	701	1,2,7	BLK	0
15422329	01	AB	8	12045688	08905563	701	1,2,7	BLK	-
15421925	01	AB	16	15332182	12084561	701	1,2,7	BLK	-
15359240	01	AC	4	12124983	12084561	701	1,2,7	GRY	-
15358634	A4	-	8	15326928	12084561	701	1,2,7	BLK	-
15305551	02	AC	10	12064770	12084561	701	1,2,7	CRM	-
15305227	A3	-	8	12047931	12015423	702	1,2,7	BLK	3
12186279	A3	-	1	12004201	08905563	701	1,2,7	BLK	-
12186108	A3	-	8	12047931	12084561	701	1,2,7	BLK	3
12186012	A3	-	2	12069863	08905563	701	1,2,7	BLK	3
12162794	A3	-	2	12092851	08905563	701	1,2,7	YEL	0
12160430	A3	-	3	12124686	12084561	701	1,2	BLK	3
12160469	A	-	6	12124107	12084561	701	1,2	BLK	3
12162457	A	-	3	12065423	12015423	702	1,2	NAT	0
12162427	A6	-	8	12065396	12084561	701	1,2,7	CRM	0
12160662	A3	-	3	15300003	12015423	702	1,2	BLK	3
12124426	A3	-	5	12092803	08905563	701	1,2	GRAY	0
12124433	A	-	4	12124583	08905563	701	1,2	GRAY	0
12124427	A	-	2	12129155	12084561	701	1,2	BLK	0
12124451	A3	-	2	12052833	12084561	701	1,2,7	BLK	0
12124450	A3	-	4	12092394	08905563	701	1,2	MED GRAY	0
12124384	A3	-	4	12052054	12015423	702	1,2	BLK	0
12125191	A3	-	8	12081167	12015423	702	1,2,7	BLK	0
12125190	A3	-	2	12084166	12015423	702	1,2,7	GRAY	0
12124092	A3	-	4	12052523	12084561	701	1,2,7	BLK	0
12103916	A3	-	4	12015024	12084561	701	1,2,7	BLK	3
12103665	A3	-	2	12064868	08905563	701	1,2,7	NAT	0
12103329	A3	-	4	12052054	12084561	701	1,2,7	BLK	0
12103021	A5	-	2	12064870	08905563	701	1,2,7	BLU	0
12099924	A3	-	6	12089745	12084561	701	1,2	GRN	0
12099889	A3	-	7	12089834	12084561	701	1,2	NAT	0
12099344	A3	-	3	12045696	08905563	701	1,2	BLK	3

DWG STATUS DATE	STR	REC	N/P	DIR	ZONE	REVISION HISTORY	AUTH	DR	APVD 1	APVD 2
08JA02	R	10	-	-	-	CLEARED REV COLUMN & 15441422 - RELEASED	227545	JDR	EDV	FR
26JA02	R	11	-	-	-	15443306 - RELEASED	228500	JDR	EDV	EM M
01AU02	R	12	-	-	-	15443306 - CLIP 12084561 WAS 08905563	228816	EDV	EDV	EM
13AU02	R	13	-	-	-	15443306 - REVISED REVISION LEVEL	229273	EDV	EDV	EM
27SE02	R	14	-	-	-	15448420 - RELEASED & ADDED NOTE	231136	PVP	PVP	EM
02OC02	R	15	-	-	-	15449359 - RELEASED	231316	PVP	PVP	EM
01NO02	R	16	-	-	-	15452716 - RELEASED	232980	EDV	EDV	EM
31JU03	M	17	-	-	-	ALL ACTIVE PARTS - REVISED ASM NOTE 2	253752	JTU	EDV	TM
25NO03	R	18	-	-	-	12066387 - CLIP 15355107 WAS 12084561	249281	EAR	EAR	ET
08DE03	R	19	-	-	-	15486364 - RELEASED; ADDED TYPE 704; ADDED NOTE 4	249645	ADR	EES	RAP
27FE04	R	20	-	-	-	15448420 - CLIP 15427170 WAS 15358692	251585	JPB	FKV	PAP
03JN04	R	21	-	-	-	12124450 - OBSOLETE	255546	TLD	TLD	MR
26JL04	-	22	-	-	-	12077442, 12077772, 12066439, 12066650 12052752, 12059984, 12052849, 12047711 12035639, 12034460, 12031133, 12020421 12020394, 12004101, 12004026, 08917738 08917353, 08900421, 02989621, 02984883 08911351, 12088889, 12089924, 12113821 12124426, 12124427, 12124451, 12124450 - MADE OBSOLETE	256332	KJA	KJA	MGP
27JL04	R	23	-	-	-	15496768 - RELEASED	257129	TSH	TSH	RP
20SE04	R	24	-	-	-	12089282 - MADE OBSOLETE	258312	MJM	MJM	MR
21OC04	R	25	-	-	-	13513962 - RELEASED	260482	KDR	KDR	MLP
24NO04	R	26	-	-	-	12116626 - RELEASED & ADDED ASM NOTE 5	261479	MDR	JAV	RP
12MY05	R	27	-	-	-	12162427 - CHANGE ASSEMBLY NOTE TO BE GLUE APPLICATION ONLY	268217	RPS	JAV	BDR
12AU05	R	28	-	-	-	12103021 - REINSTATED	271689	JTV	AUG	TP
26SE05	R	29	-	-	-	12162427 - REVISED ASM NOTE #6	273604	PTV	JAV	TP
06OC05	R	30	-	-	-	12099449 - MAT'L COLOR WAS NAT	273125	MDR	AUG	EST
01MR06	R	31	-	-	-	12124384 - OBSOLETE	277980	ETS	FRG	MW
21FE07	R	32	-	-	-	13630297 - RELEASED	490693	KDR	JAN	PVP
31JA07	R	33	-	-	-	12162427 & 13513962 MAT'L COLOR WAS NAT	492234	EAJ	AUG	ADM
26SE07	R	34	-	-	-	ALL ACTIVE PARTS - ADDED ASM NOTE 7	492470	LVR	JAN	JAV
02JN08	R	35	-	-	-	13715131 - RELEASED	494940	VMR	GEN	MM
09JL08	R	36	-	-	-	13715131 - INACTIVE	495177	VMR	AUG	WMP
31JL08	R	37	-	-	-	13722476 - RELEASED	495617	JMP	KDG	JMP
21AU08	R	38	-	-	-	13722809-12, 13722820-21, 13722824-25,29, 13722965-66 & 13723341-42 - MOVED FROM SHEET 1B TO 13722476 - INACTIVE	495813	JMP	RHG	JMP
03DE08	R	39	-	-	-	13722829 - REMOVED	496921	RHG	WDR	RHG
26JA09	R	40	-	-	-	13722980 - RELEASED	497185	JMP	GLG	JMP
19FE09	R	41	-	-	-	13722905 - ADDED ASM NOTE 8	497277	CCD	CDB	CCD
27APR9	R	42	-	-	-	13722966 - CAVITY NUMBER 2 WAS 4	497934	JMP	CDB	JMP
25SE09	R	43	-	-	-	13755360 - RELEASED	498029	CBG	MPW	APR
06NO09	R	44	-	-	-	13755364,13755365,13755366,13755361 & 13755367 - RELEASED	499431	DMC	DMC	APR
29JL10	R	45	-	-	-	13834719 - RELEASED	511457	JTZ	JTZ	BDM
16AU10	R	46	-	-	-	08917527 - OBSOLETE	511631	MAL	MAL	JMP
08SE10	R	47	-	-	-	13834946 - RELEASED	511895	FTE	FTE	FTE
30SE10	R	48	-	-	-	12048458 - UPDATED PDM ATTRIBUTES	511722	JMP	JMP	JMP
18NO10	R	49	-	-	-	13856492 & 13854497 - RELEASED	512580	KDR	JAN	MAP
19JA11	R	50	-	-	-	13715131 - REINSTATED	513126	MEM	BEM	BEM
17FE11	R	51	-	-	-	13865895 - RELEASED; 13715131 & 13862895 - INACTIVE	512844	ABM	JMP	FRE
26AP11	R	52	-	-	-	13834719 - CONN BODY WAS 12064770	413974	JRL	JRL	GM
27JN11	R	53	-	-	-	15358634 - CORRECTED REVISION LEVEL	414655	KJP	MRV	MR
12JL11	R	54	-	-	-	13834946 - CONN BODY WAS 12064767, REVISED ASSEMBLY NOTES	414816	FTE	TBR	FTE
04AU11	R	55	-	-	-	13834946 - REMOVED ASM NOTE 2 & 4 AND 13834719 - REMOVED ASM NOTE 2 & 7	415031	KJP	JWG	BEM
13JA12	R	56	-	-	-	12066498- ASSEMBLY NOTE #8 ADDED	416743	SJB	JMP	SJB
24FE12	R	57	-	-	-	13722965-66, 15496768, 13722809, 13723342 & 13722810-11 - ADDED PERFORMANCE REQUIREMENT NOTE	416679	CBG	CBG	CBG
01FE13	M	58	-	-	-	1.88938E75 - MISINSTALL	421.328	JRT	YMR	JRT
18AP13	R	59	-	-	-	1.88938E75 - UPDATED PDM ATTRIBUTES	422147	ERA	JWL	JRT

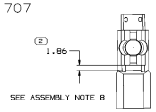

FOR PN 12066498

NOTES

1. UNLESS OTHERWISE SPECIFIED AND/OR INDICATED:

   DIMENSIONS ARE TO FACE OF VIEW SHOWN AND AUTOMATICALLY ROUNDED BY COMPUTER FOR INSPECTION. (SEE MATH MODEL FOR PRECISE DIMENSIONS.) FOR ALL OTHER DIMENSIONS NOT SHOWN BUT REQUIRED FOR TOOL BUILD, SEE MATH MODEL FOR PRECISE TOOL PATH DATA.

2. ARROW INDICATES CABLE END.

3. 8905563/12084561 CLIPS - USE 12084561 CLIP (GRAY) FOR NYLON CONNECTOR BODIES AND 8905563 FOR OTHER CONNECTOR BODY MATERIALS.

4. PROCESS ENGINEERING AND MANUFACTURING DETERMINE THE PROPER METHOD OF ASSEMBLY TO SECURE CLIP TO CONNECTOR CLIP SLOT. ANY OF THE OPTIONAL CONSTUCTION METHODS (LISTED IN ASSEMBLY NOTE #2) ARE PERMISSIBLE AS LONG AS DISENGAGE REQUIREMENTS ARE MAINTAINED FOR THE PROCESS SELECTED.

5. REFERENCE ESA 737 FOR VPS.

6. THIS PRODUCT IS NOT CATEGORIZED AS AN APPEARANCE ITEM, MINOR IMPERFECTIONS INCLUDING, BUT NOT LIMITED TO, FLOW MARKS, COLOR BLEMISHES, GATE VESTIGE, AND SOFT FLASH THAT DO NOT AFFECT THE FITS, FORM, OR FUNCTION OF THE PART ARE PERMISSIBLE PER DPNP-4.7-CS-01.

7. 13722965-66, 13722809, 13723342, 13722810-11 AND 15496768 - THIS CONNECTOR MEETS OR EXCEEDS SAE/USCAR-2 AUGUST 1997; SECTION 5.3.1.2; TERMINAL DISENGAGE CRITERIA WITH THE APPLICATION OF A TERMINAL POSITION ASSURANCE (TPA) SECONDARY LOCK.

ASM NOTES

1. ASSEMBLE CLIP SECURELY IN CONNECTOR BODY.

(1) 2. OPTIONAL ASSEMBLY CONSTRUCTIONS ARE:

   A. HEAT CRIMP - 30N MINIMUM DISENGAGE CLIP FROM CLIP SLOT
   B. SONIC WELD - 30N MINIMUM DISENGAGE CLIP FROM CLIP SLOT
   C. GLUE APPLICATION - 60N MINIMUM DISENGAGE CLIP FROM CLIP SLOT (APPLY M3549, M3520 OR M3263)

3. ASSEMBLY 15448420 CLIP SHALL WITHSTAND 60N MINIMUM DISENGAGE FORCE FROM CLIP SLOT OF CONNECTOR. THIS ASSEMBLY SHOULD BE DONE WITH GLUE (APPLY M3549 OR M3520).

4. ASSEMBLY USING 15401328 CLIP. THE ASSEMBLY SHALL WITHSTAND 60N MINIMUM DISENGAGE FORCE FROM CLIP SLOT OF CONNECTOR. THE ASSEMBLY OPTION SHOULD BE TO USE GLUE (APPLY M3549 OR M3520).

5. ASSEMBLY USING 12186089 CLIP. THE ASSEMBLY SHALL WITHSTAND 60N MINIMUM DISENGAGE FORCE FROM CLIP SLOT OF CONNECTOR. THE ASSEMBLY OPTION SHOULD BE TO USE GLUE (APPLY M3549 OR M3520).

6. GLUE APPLICATION ONLY - 60N MINIMUM DISENGAGE CLIP FROM CLIP SLOT. USE M3263003 GLUE (OPTIONAL GLUE, M3549 OR M3520).

7. SOME WHITE RESIDUE RESULTING FROM THE GLUING PROCESS IS ACCEPTABLE AND WILL NOT AFFECT PART PERFORMANCE.

8. CLIP MAY EXTEND UP TO 1.895 MAXIMUM BEYOND END OF CLIP SLOT. SEE ABOVE DETAIL IMAGE.

THE DRAWING TEMPLATE FORM NUMBER IS PRINTED ON THE PERSONAL PAPER AND NOT AVAILABLE FOR CHANGES.

PART NUMBERS THAT DO NOT HAVE A LINE PRESENT INDICATE THAT MATERIAL PARTS ARE AVAILABLE FOR ORDERING.

CONTACT ORDERING SALES TO ASSURE AVAILABILITY OF PARTS.

PART DRAWING

SCALE

VOLUME (CM³) | DENSITY (GM/CM³)

UNLESS OTHERWISE SPECIFIED
DIMENSIONS ARE IN MILLIMETERS. DIMENSIONS ARE FOR FINISHED PARTS. DRAFTING PRACTICE FOLLOWS ASME Y14.5M-1994 TOLERANCES NONCUMULATIVE. DIMENSIONS ARE FOR PRE-PLATED PARTS. ALL DIMENSIONS ARE FOR PRE-PAINTED PARTS. ALL DIMENSIONS ARE FOR PRE-PLASTICIZED PARTS. ALL DIMENSIONS ARE FOR PRE-PLAT