SYMBOL DEFINITION		
A DIMENSION WITHOUT AN INSPECTION REPORT SYMBOL (3) DOES NOT REQUIRE INSPECTION. IT MAY BE CONTROLLED ON THE INDIVIDUAL COMPONENT DRAWING.	TOTAL NO OF INSPECTIONS REQUIRED	17
	LAST NO. USED	12

MISSING SYMBOLS
NO MISSING SYMBOL NUMBER

DWG STATUS DATE	STS	REV	N/P	CHG	ZONE	REVISION HISTORY	AUTH	DR	APVD 1	APVD 2
24JL02	R	01	-	-		ALL PARTS - RELEASED; 12059111 - WAS SEPARATE DWG & ADDED ANTI-MATILE RIBS	227272	RVP	RVP	GMC
24JL02	R	02	-	-		12059111 - MAT'L SPEC R0065644 PA6 BLU & ADDED DELPHI CORPORATE BRAND AND MAT'L RECYCLING CODE LOGO	227723	RVP	RVP	GMC
20JA03	R	03	-	-		12059111 - MAT'L SPEC WAS W3596008 PA6 AND 15441821 - MAT'L SPEC WAS M3596003 PA6	235555	ARA	ARA	ET
22SE08	R	04	-	-		ALL PARTS - REVISED GRAPHICS	406162	ECB	AUG	WTM

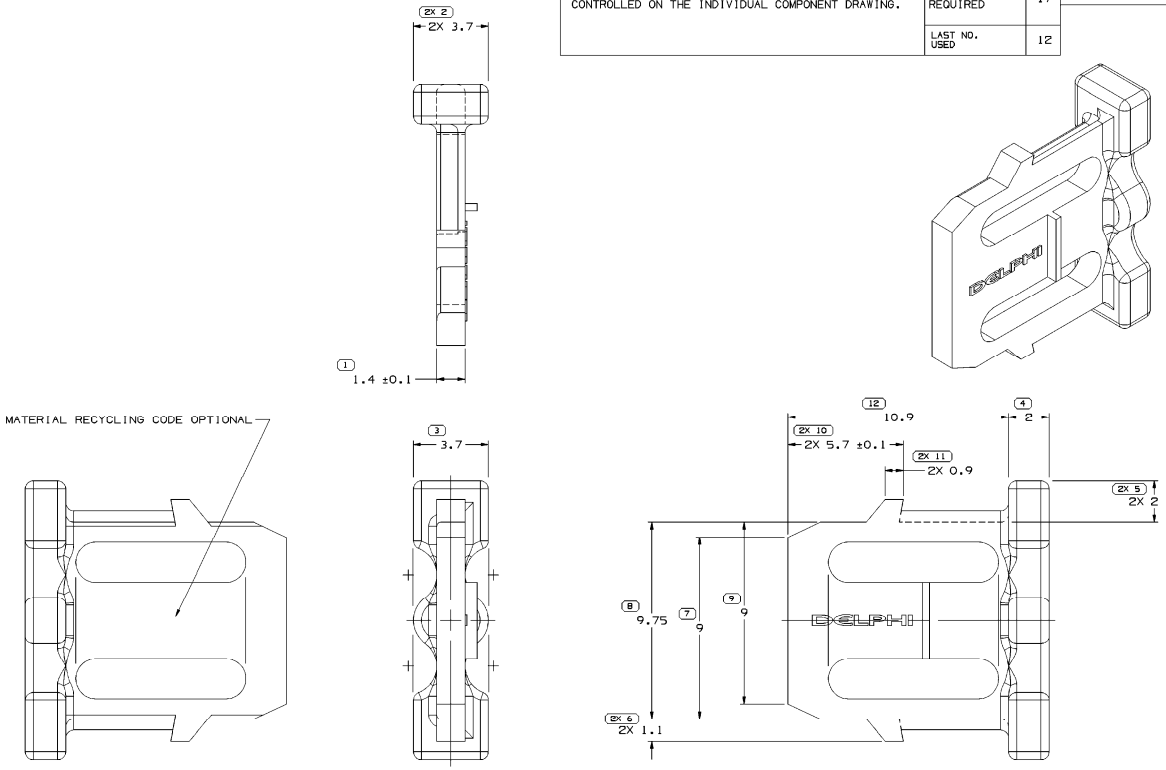

NOTES

1. UNLESS OTHERWISE SPECIFIED AND/OR INDICATED:

   DIMENSIONS ARE TO FACE OF VIEW SHOWN AND AUTOMATICALLY ROUNDED BY COMPUTER FOR INSPECTION (SEE MATH MODEL FOR PRECISE DIMENSIONS). FOR ALL OTHER DIMENSIONS NOT SHOWN BUT REQUIRED FOR TOOL BUILD, SEE MATH MODEL FOR PRECISE TOOL PATH DATA.

2. THIS PRODUCT IS NOT CATEGORIZED AS AN APPEARANCE ITEM, MINOR IMPERFECTIONS INCLUDING, BUT NOT LIMITED TO, FLOW MARKS, COLOR BLEMISHES, GATE VESTIGE, AND SOFT FLASH THAT DO NOT AFFECT THE FIT, FORM, OR FUNCTION OF THE PART ARE PERMISSIBLE PER NAP 4.10-18.
3. MATERIAL RECYCLING CODE >PA66< PER SAE J1344. (0.75)X(0.1) RAISED CHARACTERS AS SHOWN TO BE LOCATED ON ANY EXTERIOR SURFACE.
4. THIS PART IS NOT CONTROLLED FOR AUTOMATIC FEEDING.
5. REFERENCE MATING COMPONENTS OR EQUIVALENT:

   CONNECTOR 12059110

6. (0.5)X(0.1) RAISED DELPHI CORPORATE BRAND TO BE LOCATED ON ANY EXTERIOR SURFACE, PREFERABLY VISIBLE AT FINAL ASSEMBLY. OPTIONAL CONSTRUCTION TO BE "PED" OR NO LOGO.
7. PART IS SYMMETRICAL ABOUT IT'S CENTERLINES.

PART NO	REV	N/P	STATUS	MATERIAL SPECIFICATION AND COLOR	VOL CM³
15441821	02	AA		POLYAMIDE COMPOUND GRAY MD	0.189
12059111	06	AA		POLYAMIDE COMPOUND BLUE	0.189

DIMENSIONAL RANGE (MM) FROM TO	>0 20	>20 30	>30 70	>70 100	>100 150	>150 200	>200 250	>250 300	>300 400	CHART ET
TOLERANCE UNLESS OTHERWISE SPECIFIED	±0.15	±0.2	±0.3	±0.4	±0.5	±0.6	±0.8	±1	±1.2	-
ANGULAR TOLERANCE ±2°										

(3) PROCESS SENSITIVE DIMENSION

DIMENSIONS ENCLOSED IN ( ) INDICATE REFERENCE DIMENSIONS AND NO TOLERANCE LIMITS ARE ESTABLISHED

REFERENCE

THIRD ANGLE PROJECTION

DO NOT SCALE

USE MATH DATA

NX

DWG TYPE: PART DRAWING

STYLE

VOLUME (CM³): SEE CHART

DISTR CODE

UNLESS OTHERWISE SPECIFIED

THIS DOCUMENT IS IN ACCORDANCE WITH ASME Y14.5M-1994 AS AMENDED BY THE DM GLOBAL DIMENSIONING AND TOLERANCING ADDENDUM (.DM). ALL GEOMETRIC TOLERANCES AND RELATED DATUMS APPLY RFS. RULE #1(PERFECT FORM AT MMC) DOES NOT APPLY WHEN RELATIONSHIP BETWEEN FEATURES IS ESTABLISHED BY ORIENTATION OR LOCATION TOLERANCES. SEPARATE POSITION CALLOUTS MAY BE GIVEN SEPARATELY, REGARDLESS OF DATUM REFERENCE.

ALL DIMENSIONS ARE IN MILLIMETERS

DELPHI

DELPHI PACKARD ELECTRICAL/ELECTRONIC ARCHITECTURE
WARREN, OH

DR		DATE
APVD1	R. VILLANUEVA	24JL02
APVD2	R. VILLANUEVA	24JL02
APVD3	G. MACIAS	27JL02
APVD4		
APVD5		

SUBSTANCES OF CONCERN AND RECYCLED CONTENT PER DELPHI (094900)

MATERIAL: SEE CHART

DRAWING NAME: TAXI LOCK SECONDARY TPA M/P

DRAWING NUMBER: 15441822

SIZE	SCALE	FRAME NO	SHEET NO	STS	REV	N/P
A1	10:1	1 OF 1	1 OF 1	R	04	-

User: 15129
15441822: 1050 SOI Date: 23 Sep 08 Time: 08:41
Wesspark