DO NOT SCALE

PART NO. 1211 0490

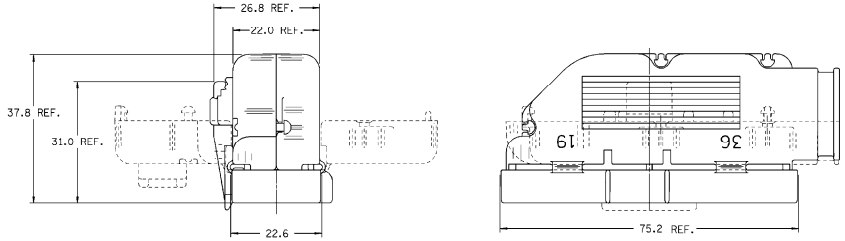

STRAIN RELIEF SHOWN
IN ASSEMBLED POSITION

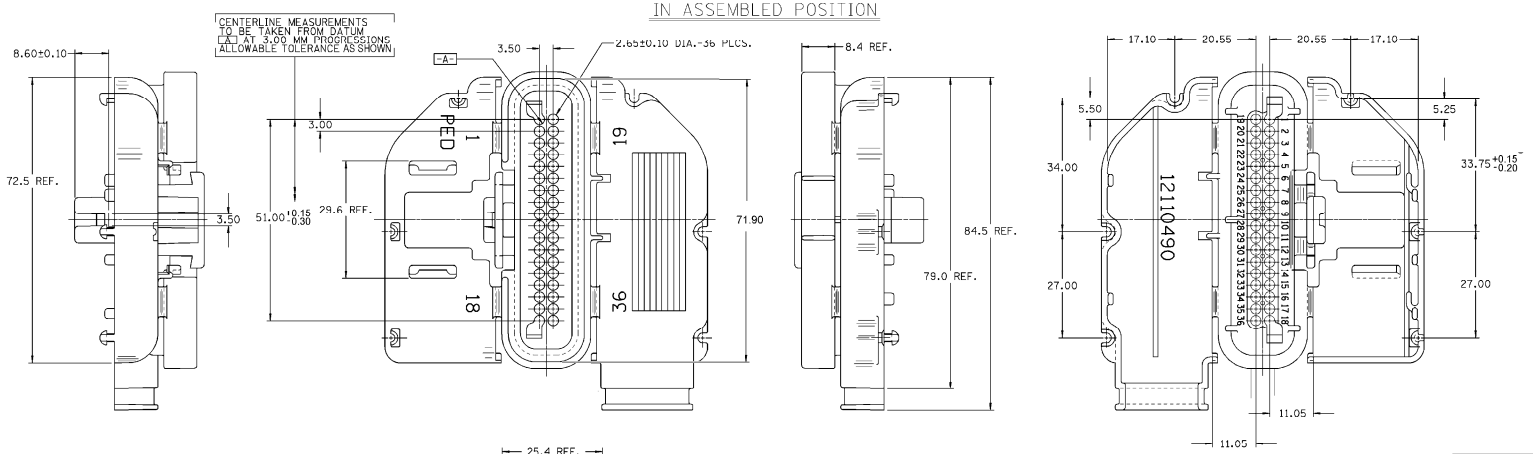

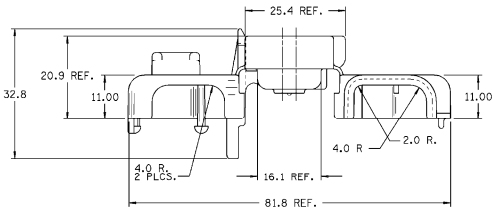

NOTES — 1. THIS PART ACCEPTS 12084912 TERMINAL OR EQUIVALENT.
2. MATING FEMALE CONNECTOR 12110487 OR EQUIVALENT.
3. THIS PART ACCEPTS 12110489 SEAL OR EQUIVALENT.
4. THIS PART ALSO USED WITH RETAINER 12110488 ,CAVITY PLUG(S) 12129557, C.P.A. 12110299 AND WHEN FULLY ASSEMBLED MATES TO HEADER CONNECTOR ASSEMBLY 12110485 OR EQUIVALENTS.
5. ENVIRONMENTAL SEAL CLASS CODE 3.
6. DIMENSIONS MARKED "REF." ARE FOR REFERENCE ONLY AND NO TOLERANCE LIMITS ARE ESTABLISHED.
7. CRIMP WING DIMENSIONS AFTER CRIMPING MAY NOT EXCEED 2.55 MM DIAMETER. MAX CABLE O.D. 2.42 MM. REFER TO ESA-605 FOR CRIMP DIMENSIONS.

○ R THIS CONNECTION SYSTEM DOES NOT MEET 75N MAX ERGONOMIC STANDARD.

DATE	SYM	REVISION RECORD	AUTHORITY	DR	CK
13NOV00	C	WAS 12024763 & RELEASED	500005	JL	JK
13NOV00	D	REVISED GRAPHICS & DIMENSIONS	136240	JL	JK
08SEP01	E	ADDED NO STRESS RELIEF FEATURES			
		& ANTI SLIDE MECHANISM	144906	GJP	DJP
08SEP01	F	REVISED	144387	GJP	DJP
23DEC01	G	ADDED BUMPS 4 PLCS	144030	GJP	DJP
19OCT01	H	MAT'L SPEC WAS NITRIL 9236 - BLACK	144884	BKD	BKD
30JAN02	J	ADDED SPA GUIDE RAILS AND REVISED	147015	BKD	BKD
15JUL02	K	REVISED	150876	BAR	BAR
29OCT03	K2	REVISED NOTES	157607	HH	HL
17APR07	K3	MAT'L SPEC WAS RG27746 REVISED			
		TOLS 5.00 +0.15/-0.30 WAS 51.00			
		+/-0.10 & 33.0 +0.15/-0.20 WAS			
		33.75 +/-0.15	401150	JTZ	JOD
13DEC07	K4	ADDED DIM (1 PLC) AND			
		75.2 REF WAS 75.2 +/-0.3	403269	JTV	AUG
24MR09	K5	ADDED NOTE 8	407566	MGC	MJF

PACKARD ELECTRIC DIVISION
GENERAL MOTORS CORPORATION
WARREN, OHIO

PED / INTERGRAPH

FILE SPEC: ####USER#### DGN#SPECIFICATION#### ####SYTIME####

THIRD ANGLE PROJECTION

METRIC
DIMENSIONS ARE IN MILLIMETERS UNLESS OTHERWISE SPECIFIED.

CODE NO. 6900

TOLERANCE UNLESS OTHERWISE SPECIFIED
DECIMALS: ONE PLACE ± 0.3 TWO PLACE ± 0.5
ANGULAR ± °

Q.C.

DWG. DATE 06MR90 SCALE NONE

DR. J.GUERNIK 10NOV90

EST. NO. CK. J.GUERNIK DATE 19NOV90

REFERENCE NO. 12110490 "RE" SIZE APPR. CHRIS REIDER DATE 30NOV90 APPR. G. J. POLEFKI DATE 30NOV90

MATERIAL SPEC. THERMOPLASTIC ELASTOMER

NAME STRAIN RLF 36F M/C/P 10CW RH 90DEG

PART NO. 1211 0490 OUTLINE DRAWING

SIZE D

PACKARD ELECTRIC