DELPHI PACKARD ELECTRIC SYSTEMS
WARREN, OHIO 44486

SYMBOL DEFINITION		
A DIMENSION WITHOUT AN INSPECTION REPORT SYMBOL ( ) DOES NOT REQUIRE INSPECTION. IT MAY BE CONTROLLED ON THE INDIVIDUAL COMPONENT DRAWING.	TOTAL NO OF INSPECTIONS REQUIRED	24
	LAST NO. USED	17

MISSING SYMBOLS
NO MISSING SYMBOL NUMBER

DWG STATUS					ZONE	REVISION HISTORY	AUTH	DR	CK	APVD
DATE	STG	REV	CHG	N/P						
01FE00	R	001	-	-		ALL PARTS - CREATED PD. ADDED OPTIONAL CONSTRUCTION AND MATERIAL RECYCLING CODE NOTES & REVISED MATERIAL SPEC	000009	RH	EGV	RC

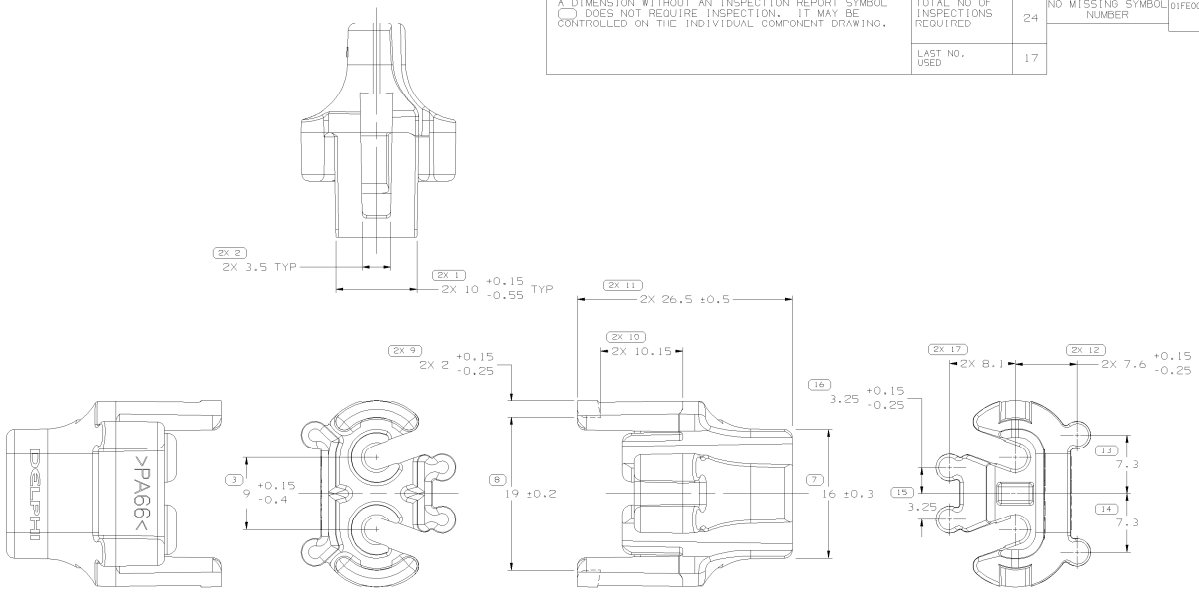

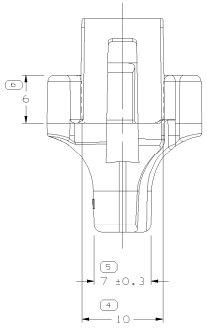

NOTES

1. UNLESS OTHERWISE SPECIFIED AND/OR INDICATED:
   DIMENSIONS ARE TO FACE OF VIEW SHOWN AND AUTOMATICALLY ROUNDED BY COMPUTER FOR INSPECTION (SEE MATH MODEL FOR PRECISE DIMENSIONS). FOR ALL OTHER DIMENSIONS NOT SHOWN BUT REQUIRED FOR TOOL BUILD, SEE MATH MODEL FOR PRECISE TOOL PATH DATA.
2. MATERIAL RECYCLING CODE >PA66< PER SAE J1344. (2.3)X(0.1) RAISED CHARACTERS AS SHOWN TO BE LOCATED ON ANY EXTERIOR SURFACE. OPTIONAL CONSTRUCTION TO BE NO MATERIAL RECYCLING CODE.
3. THIS PART IS NOT CONTROLLED FOR AUTOMATIC FEEDING.
4. MATING COMPONENTS OR EQUIVALENT:
   CONNECTOR 12020808
5. (2.3)X(0.1) RAISED DELPHI CORPORATE BRAND TO BE LOCATED ON ANY EXTERIOR SURFACE, PREFERABLY VISIBLE AT FINAL ASSEMBLY. OPTIONAL CONSTRUCTION TO BE "PED" OR NO LOGO.
6. THE MATERIAL SPECIFIED CANNOT BE CHANGED WITHOUT THE APPROVAL OF THE SUPERVISOR OF COMPONENT LIAISON OR HIS DELEGATE.

PART NO	REV	N/P	STATUS	MATERIAL SPECIFICATION AND COLOR	VOLUME CM³
12089754	C1	-		M3592025 PA66 IM HS GRA MD	2.588
12034446	E1	-		M3592001 PA66 IM HS BLK	2.588

R 0.1 MAX
R 0.2 MAX
SHARP CORNER TOLERANCE

DIMENSIONAL RANGE (MM)										CHART E1
FROM	0	> 20	> 30	> 70	> 100	> 150	> 200	> 250	> 300	
TO	20	30	70	100	150	200	250	300	400	
TOLERANCE UNLESS OTHERWISE SPECIFIED										
	±0.15	±0.2	±0.3	±0.4	±0.5	±0.6	±0.8	±1	±1.2	
ANGULAR TOLERANCE ± 2°										

(11) PROCESS SENSITIVE DIMENSION

DIMENSIONS ENCLOSED IN ( ) INDICATE REFERENCE DIMENSIONS AND NO TOLERANCE LIMITS ARE ESTABLISHED

DELPHI Automotive Systems

MATERIAL SPEC
SEE CHART

SUBSTANCES OF CONCERN AND RECYCLED CONTENT PER DELPHI-A 10949001

PART DRAWING

DISTR CODE: D

CODE NUMBER	DWG DATE	SCALE
6900	31MY89	4:1
QC SPEC	STYLE	VOLUME cm³
		SEE CHART

PART GEOMETRY
3D SOLID

UG
CHANGE RESTRICTED
NO MANUAL CHANGES

COPY OF MATH DATA
DO NOT SCALE

METRIC
UNLESS OTHERWISE SPECIFIED, ALL DIMENSIONS ARE IN MILLIMETERS

THIRD ANGLE PROJECTION

UNLESS OTHERWISE SPECIFIED:
THIS DOCUMENT IS IN ACCORDANCE WITH ASME Y14.5M - 1994 AS AMENDED BY THE GM GLOBAL DIMENSIONING AND TOLERANCING ADDENDUM - 1997. ALL GEOMETRIC TOLERANCES AND RELATED DATUMS APPLY RFS. RULE #1 (PERFECT FORM AT MMC) DOES NOT APPLY. WHEN RELATIONSHIP BETWEEN FEATURES IS ESTABLISHED BY ORIENTATION OR LOCATION TOLERANCES, SEPARATE POSITION CALLOUTS MAY BE GAGED SEPARATELY REGARDLESS OF DATUM REFERENCES.

REFERENCE	DR	DATE
	APVD1 R. HERMOSILLO	01FE00
	APVD2 E. VAZQUEZ	01FE02
	APVD3 R. CORZAS	01FE02
	APVD4	
	APVD5	

DRAWING NAME
TAXI TPA M/P 280

SHEET NUMBER 1 OF 1

DRAWING NUMBER 12089765

DWG STATUS			SIZE
STG	REV	N/P	
R	001	-	A1