NOTE	DESCRIPTION
1	MALE CONNECTOR ACCORDING TO: - CONNECTOR TEMPERATURE CLASS : CLASS 3 (-40° C ; +125° C) - VIBRATION CLASS : CLASS 1 - SEALING CLASS : CLASS 2 IPX7 : TEMPORARY IMMERSION IN WATER UNDER 15cm ; 1000mb AT INITIAL / 500mb AFTER AGEING IN STATIC CONDITION ONLY - MATING CLASS : CLASS 3 MATING FORCE : 70 N MAX
2	APTIV PRODUCT SPECIFICATIONS : FE PS 17 010
3	USER'S MANUAL : PU246
4	PACKAGING DELIVERY CONDITION : SEE HANDLING MANUAL
5	DELIVERY CONNECTOR WEIGHT : 57.6± 5% g
6	MALE CONNECTOR DRAWING : 35329007-CUS04
7	- TEST TEMPERATURE : 125°C - SEALING AFTER AGEING IN STATIC CONDITION ONLY - INSULATION RESISTANCE : 100 MΩ MIN - APEX 2,8 FEMALE TERMINAL INSERTION FORCE : F = 25N MAX - APEX 2,8 FEMALE TERMINAL RETENTION FORCE : INITIAL 110 N MIN, AFTER AGEING 95N MIN - WORST ENGAGING TEST UNDER 80 N - RETENTION FORCE ON THE DEVICE UNDER 120 N - CONNECTOR MATING FORCE : 70 N MAX

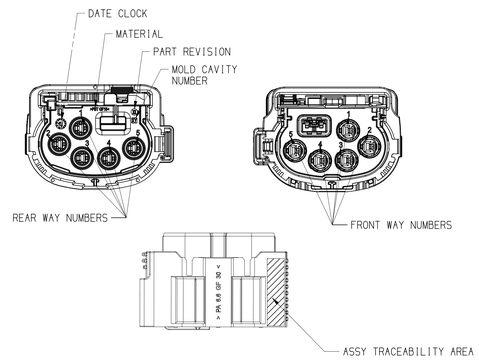

MARKING IDENTIFICATION — SCALE 1:1

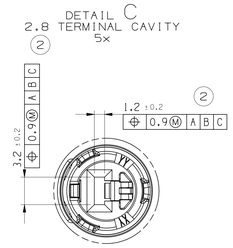

DETAIL CAVITY — SCALE 4:1

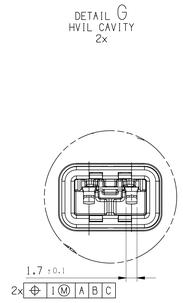

DETAIL CAVITY — SCALE 3:1

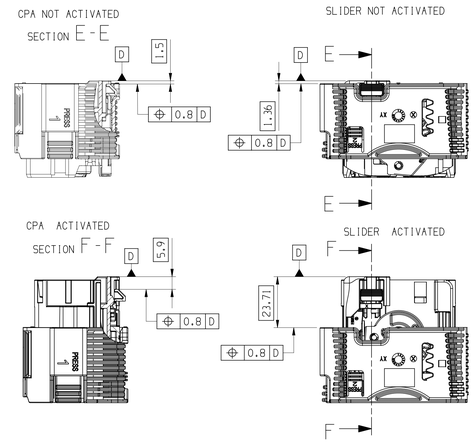

SLIDER AND CPA POSITIONS — SCALE 1:1

DWG STATUS							REVISION HISTORY	AUTH	DR	APVD 1	APVD 2
DATE	STG	REV	N/P	CHG	ZONE						
02DE20	R	01					INITIAL RELEASE		A.RAJ	M.GUI	J.FAB
11JA23	R	02				GTOL CHANGE DIMENSION CHANGE			S.BAS	G.DON	
17MR23	R	02	AA		C15		APTIV PART NUMBER REVISION TABLE ADDED		S.BAS	G.DON	
17JN24	R	03	-	-	-		CHAMFER UPDATED IN THE TERMINAL CAVITY AREA		S.NID	G.DON	

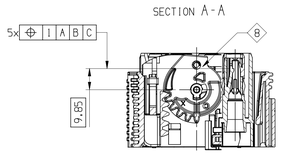

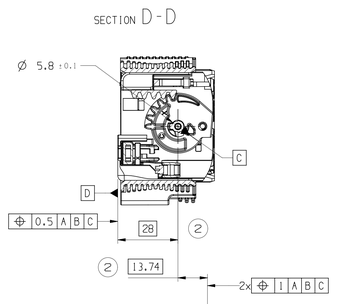

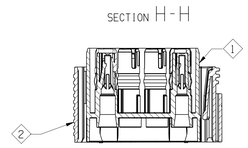

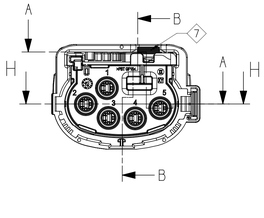

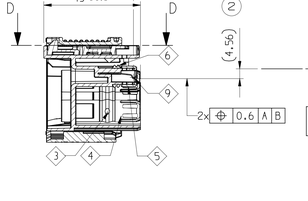

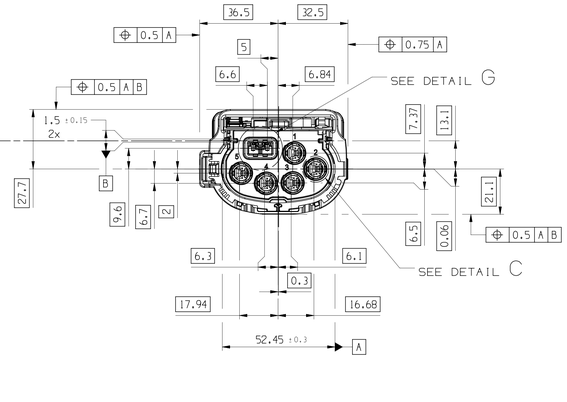

APTIV PART NUMBER	REVISION
35329023	03

02AA

ASSOCIATED PARTS (FOR INFORMATION)

DESIGNATION	APTIV P/N	WIRE SECTION	EXTERNAL WIRE DIAMETER	SWS APTIV P/N	SWS COLOR
TINNED APEX280 FEMALE TERMINAL	10810733	6mm²	Ø 4 MINI - 4.3 MAXI	12186636	WHITE
			Ø 4.7 MINI - 4.9 MAXI	15324981	BLUE

	ITEM	DESCRIPTION	APTIV P/N	MATERIAL	COLOR	QUANTITY
5W APEX 280 FEMALE CONNECTOR	9	SHUNT	33508736	GOLD PLATED STAINLESS STEEL	-	1
	8	GEAR CAM	33514132	PA66 GF30	BLACK	1
	7	CPA	33508803	PA66 GF30	BLUE	1
	6	HVIL SEAL	33501740	LSR	BLUE	1
	5	HVIL PLASTIC CAP	35082113	PA66 GF30	BLACK	1
	4	PLASTIC CAP FOR UNIT SEAL	33508812	PA66 GF30	BLACK	5
	3	UNIT SEAL	35328069	LSR	MEDIUM GREY	5
	2	SLIDER	33508807	PA66 GF30	BLACK	1
	1	PLUG HOUSING	35329022	PBT GF 15	ORANGE	1

BILL OF MATERIAL

3D VIEW

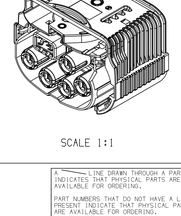

SCALE 1:1

A LINE DRAWN THROUGH A PART NUMBER INDICATES THAT PHYSICAL PARTS ARE NOT AVAILABLE FOR ORDERING.

PART NUMBERS THAT DO NOT HAVE A LINE PRESENT INDICATE THAT PHYSICAL PARTS ARE AVAILABLE FOR ORDERING.

CONTACT APTIV SALES TO ASSURE AVAILABILITY OF PARTS.

R 0.1 MAX
R 0.2 MAX
SHARP CORNER TOLERANCE

DIMENSIONAL RANGE (MM)											CHART E1
FROM	> 0	> 20	> 30	> 70	> 100	> 150	> 200	> 250	> 300		
TO	20	30	70	100	150	200	250	300	400		
TOLERANCE UNLESS OTHERWISE SPECIFIED											
±0.15	±0.2	±0.3	±0.4	±0.5	±0.6	±0.8	±1	±1.2			
ANGULAR TOLERANCE ±2°											

DIM TO CHECK
( ) DIM FOR HELP
THEORETIC DIM

DO NOT SCALE
USE MATH DATA

DWG TYP: CUSTOMER PART DRAWING
WEIGHT (GR): SEE TABLE
VOLUME (CM³): ---
ROUTING:
DISTR CODE: D

UNLESS OTHERWISE SPECIFIED

GENERAL TOLERANCES ACCORDING TO:
±0.2
±0.5°

GD&T ACCORDING TO:
ISO 1101

REFERENCE

FIRST ANGLE PROJECTION

•APTIV•
CONNECTION SYSTEMS
Chennai, India
COPYRIGHT 2020 APTIV. ALL RIGHTS RESERVED.
THIS DRAWING IS THE PROPERTY OF APTIV AND CONTAINS APTIV CONFIDENTIAL INFORMATION. THE REPRODUCTION, DISTRIBUTION AND UTILIZATION OF THIS DOCUMENT OR ITS RELATED CAD MATH DATA, AS WELL AS COMMUNICATION OF ANY CONTENT TO OTHERS, WITHOUT EXPRESS AUTHORIZATION, IS PROHIBITED.
CE PLAN EST LE PROPRIETE DE APTIV ET CONTIENT DES INFORMATIONS APTIV CONFIDENTIELLES. LA REPRODUCTION, LA DISTRIBUTION ET L'UTILISATION DE CE DOCUMENT OU DE SES DONNÉES MATHÉMATIQUES CAO, AINSI QUE LA COMMUNICATION DE TOUT CONTENU À AUTRUI, SANS AUTORISATION EXPRESSE EST INTERDITE.

		DATE
DR	A.RAJEEV	02DE20
APVD1	M.GUILLANTON	02DE20
APVD2	J.FABRE	02DE20
APVD3		
APVD4		
APVD5		

SUBSTANCES OF CONCERN AND RECYCLED CONTENT PER APTIV 10949001
MATIERES PRESCRITES ET CONTENU RECYCLABLE SELON APTIV 10949001

MATERIAL: SEE TABLE

DRAWING NAME: 5W APEX280 FEMALE CONNECTOR

DRAWING NUMBER: 35329023

SIZE	SCALE	FRAME NO	SHEET NO	STG	REV	N/P
A0	1:1	1 OF 1	1 OF 1	R	03	-

Upart: LFemia
Form: PS0020023-01R04-SOLIDCAD
Dgm: PS0020023-01R04-SOLIDCAD
Date: 09-Jul-24 Time: 19:43:36