SYMBOL DEFINITION		
A DIMENSION WITHOUT AN INSPECTION REPORT SYMBOL (_) DOES NOT REQUIRE INSPECTION. IT MAY BE CONTROLLED ON THE INDIVIDUAL COMPONENT DRAWING.	TOTAL NO OF INSPECTIONS REQUIRED	11
	LAST NO. USED	11

MISSING SYMBOLS

NO MISSING SYMBOL NUMBER

DWG STATUS DATE	STS	REC	N/P	CHG	ZONE	REVISION HISTORY	AUTH	DR	APVD1	APVD2
05APR1	R	07	-	-	-	ALL PARTS - REDRAWN TO PD & ADDED OPTIONAL CONSTRUCTION.	297684	HH	EDV	DMC
29MR9A	R	18	-	-	-	ALL PARTS - REVISED "PART ACCEPTS" NOTE TO "2.45 WIDE"	253521	KDK	KDK	BG
06OCT5	R	19	-	-	-	12059282 - TAXI NAME WAS CONN M/P 150; 12059256 - MATL SPEC WAS W25K0202	273120	MDH	JAA	EST
28JA10	R	10	-	-	-	ALL PARTS - ADDED ATTRIBUTE NOTE, ADDED APPLICATION NOTE AND UPDATED PDM ATTRIBUTES	499934	REM	DEM	DEM
02NOV12	R	11	-	-	-	13649649 - WAS SEPARATE DRAWING	470338	JAR	JAR	JRV

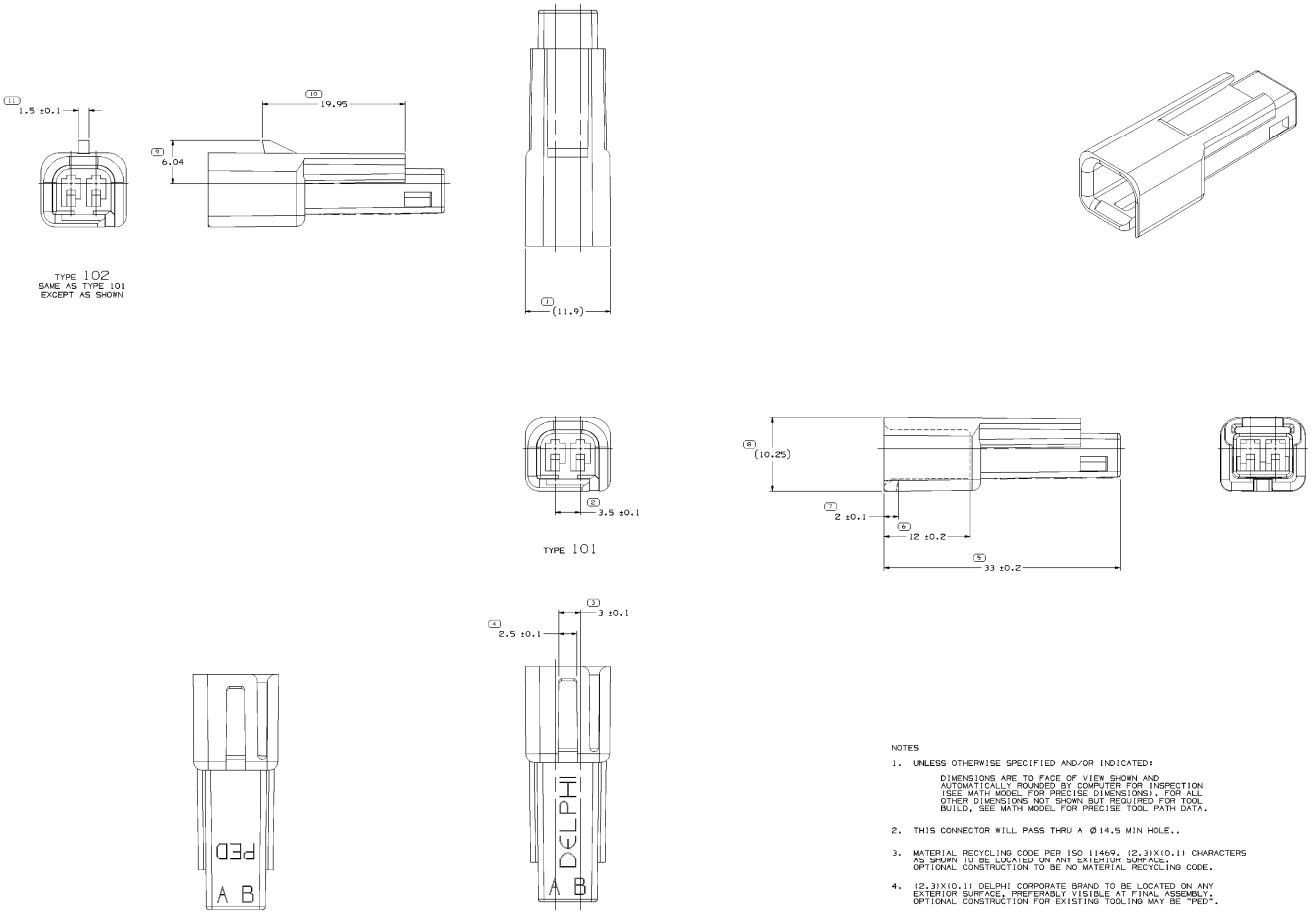

OPTIONAL CONSTRUCTION

NOTES

1. UNLESS OTHERWISE SPECIFIED AND/OR INDICATED:

   DIMENSIONS ARE TO FACE OF VIEW SHOWN AND AUTOMATICALLY ROUNDED BY COMPUTER FOR INSPECTION (SEE MATH MODEL FOR PRECISE DIMENSIONS). FOR ALL OTHER DIMENSIONS NOT SHOWN BUT REQUIRED FOR TOOL BUILD, SEE MATH MODEL FOR PRECISE TOOL PATH DATA.

2. THIS CONNECTOR WILL PASS THRU A Ø14.5 MIN HOLE..

3. MATERIAL RECYCLING CODE PER ISO 11469. (2.3)X(0.1) CHARACTERS AS SHOWN TO BE LOCATED ON ANY EXTERIOR SURFACE. OPTIONAL CONSTRUCTION TO BE NO MATERIAL RECYCLING CODE.

4. (2.3)X(0.1) DELPHI CORPORATE BRAND TO BE LOCATED ON ANY EXTERIOR SURFACE, PREFERABLY VISIBLE AT FINAL ASSEMBLY. OPTIONAL CONSTRUCTION FOR EXISTING TOOLING MAY BE "PED".

5. THIS PRODUCT IS NOT CATEGORIZED AS AN APPEARANCE ITEM. MINOR IMPERFECTIONS INCLUDING, BUT NOT LIMITED TO, FLOW MARKS, COLOR BLEMISHES, GATE VESTIGE, AND SOFT FLASH THAT DO NOT AFFECT THE FIT, FORM, OR FUNCTION OF THE PART ARE PERMISSIBLE PER DPNP-4.7-CS-01.

6. FOR APPLICATION DATA SEE THE INDIVIDUAL APPLICATION DRAWINGS.

PART NO	REV	N/P	MATERIAL SPECIFICATION AND COLOR	TYPE	VOLUME
13649649	01	AB	POLYAMIDE COMPOUND BLACK	102	1.476
12059250	04	AA	POLYAMIDE COMPOUND CREAM	101	1.467
12059248	C3	-	POLYAMIDE COMPOUND GRAY	101	1.467
12047663	C3	-	POLYAMIDE COMPOUND BLACK	101	1.467

(S) PROCESS INSPECTION STANDARDS

STANDARDS INC.DWG. 01 J. 1993/07/1
STANDARDS INC.DWG. 01 J. 1993/07/1 AS TOLERANCE LIMITS ARE DEVELOPED.

| DIMENSIONAL RANGE | | |