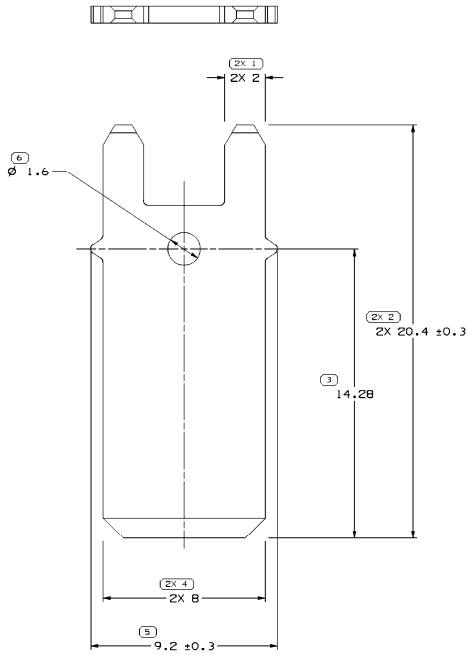
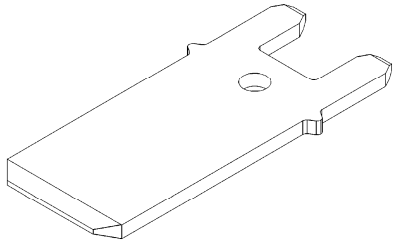
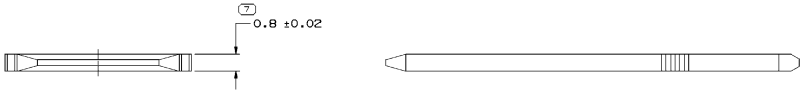
SYMBOL DEFINITION		
A DIMENSION WITHOUT AN INSPECTION REPORT SYMBOL ( ) DOES NOT REQUIRE INSPECTION. IT MAY BE CONTROLLED ON THE INDIVIDUAL COMPONENT DRAWING.	TOTAL NO OF INSPECTIONS REQUIRED	10
	LAST NO. USED	7

MISSING SYMBOLS
NO MISSING SYMBOL NUMBER

DWG STATUS DATE	STG	REV	N/P	CHG	ZONE	REVISION HISTORY	AUTH	DR	APVD 1	APVD 2
25JL02	R	02	-	-		CLEARED REVISION COLUMN, REVISED NOTES AND ADDED TOLERANCE 2 PLCS	227237	BRB	BRB	WJ
23JN10	R	02	AA	-		UPDATED MSPEC WAS M3742 STOL 80 R360	411183	LHT	LHT	LHT







PACKAGING NOTES:

1. TERMINALS MUST BE LOOSE PIECE
2. PARTS SHOULD BE PLACED IN CLEAN PLASTIC TUBS OR PANS LINED WITH POLYETHYLENE BAGS DURING PROCESSING. BAGS SHALL BE CLOSED WITH DESSICANT DURING STORAGE AND SHIPMENT. WAXED LINED BOXES MAY BE SUBSTITUTED FOR POLYETHYLENE BAGS.
3. TERMINALS PACKAGING SHALL NOT WEIGH IN EXCESS OF 40 LBS.

4 PROCESS SENSITIVE DIMENSION

DIMENSIONS ENCLOSED IN ( ) INDICATE REFERENCE DIMENSIONS AND NO TOLERANCE LIMITS ARE ESTABLISHED

DIMENSIONAL RANGE (MM)	CHART D
FROM 0 TO 12	> 12
TOLERANCE UNLESS OTHERWISE SPECIFIED	
±0.1	±0.2
ANGULAR TOLERANCE ±2°	

REFERENCE

THIRD ANGLE PROJECTION

DO NOT SCALE USE MATH DATA

NX

DWG TYPE: PART DRAWING

STYLE

VOLUME (CAT)

DISTR CODE

ROUTING: 6900

UNLESS OTHERWISE SPECIFIED

THIS DOCUMENT IS IN ACCORDANCE WITH ASME Y14.5M-1994 AS AMENDED BY THE GM GLOBAL DIMENSIONING AND TOLERANCING ADDENDUM - 1997. ALL GEOMETRIC TOLERANCES AND RELATED DATUMS APPLY PER ASME Y14.5M-1994 RULE #1(REPEATED FORM 1) UNLESS NOT APPLICABLE. THEORETICALLY EXACT FEATURES (BASIC DIMENSIONS) SHALL HAVE NO TOLERANCES. GENERAL NOTES OR SYMBOLS THAT CONTRADICT THIS INTERPRETATION (MULTIPLE WAY OF RAISED SURFACES). REMOVABLE OF DATUM REFERENCE.

DELPHI

DELPHI PACKARD ELECTRIC SYSTEMS
WARREN, OH

		DATE
DR		
APVD1	ISRAEL HDEZ NOVOA	02APR02
APVD2	FCO. RESENDIZ	03APR02
APVD3	LISA PROX	04APR02
APVD4		
APVD5		

SUBSTANCES OF CONCERN AND RECYCLED CONTENT PER DELPHI (0949900)

MATERIAL: M3742073

DRAWING NAME: TERM M M/P 800 SN INSERT MOLDED

DRAWING NUMBER: 15424714

SIZE	SCALE	FRAME NO	SHEET NO	STG	REV	N/P
A1	10:1	1 OF 1	1 OF 1	R	02	AA