SEALING CLASS	E0 NOT WATERPROOF
VIBRATION CLASS	V1
TEMPERATURE CLASS	T2 -40°...+100°C
INTERFACE DRAWING	AK INTERFACE STANDARD S1051201
MATING FORCE	F<45N

ASSOCIATED FEMALE TERMINAL	SUPPLIER PART NUMBER	MAXIMUM WIRE CROSS SECTION
TE NANOMQS	1-1802183-1 2-1802183-1	0.13mm² 0.35mm²
APTIV CTS 050	33124946 33124945	0.13mm² 0.35mm²

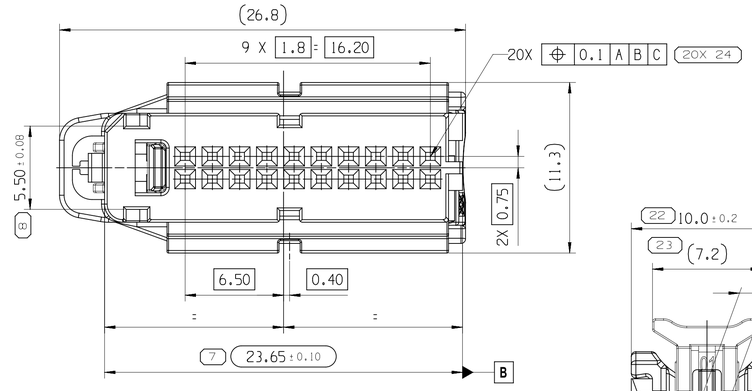

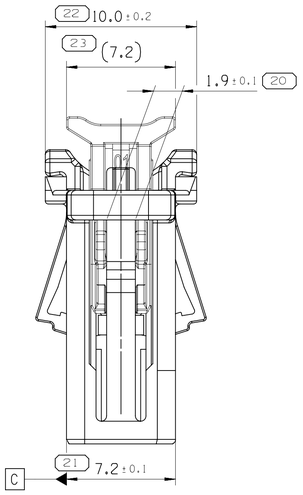

VUE AVEC CAPOT ASSEMBLE
VIEW WITH COVER ASSEMBLY
2:1

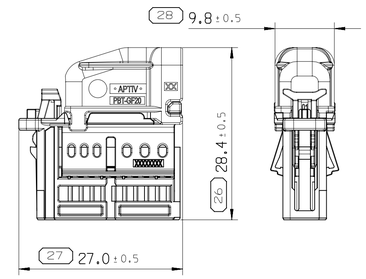

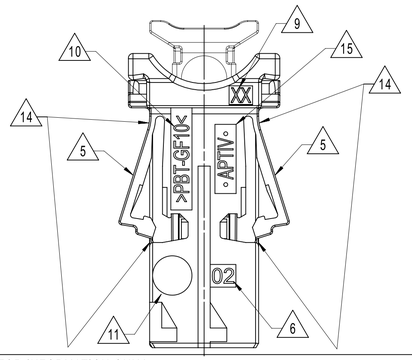

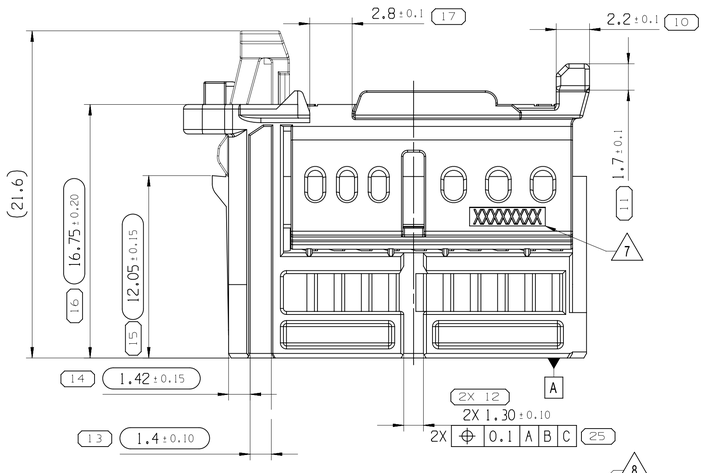

FOR INFORMATION ONLY:
SECONDARY LOCKING
DEVICE IN END-LOCKED
POSITION

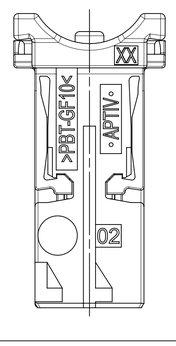

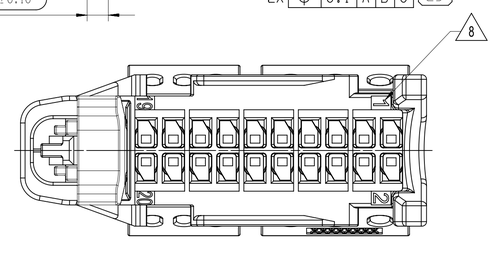

	NOTES
1	MAXIMUM WIRE SIZE RANGE 0.35mm² (Ø1.40mm) / MINIMUM 0.13mm² (Ø0.85mm)
2	PART LINE BURR AND FLASH <0.3mm PERMITTED, IF FUNCTION IS NOT AFFECTED
3	PACKAGING AS LOOSE PIECE
4	GENERAL TOLERANCE: ISO 8015-DIN EN ISO 291:2008-08 ⌓ 0.3 CZ
12	DELIVERY CONDITIONS SECONDARY LOCKING DEVICE IN PRELOCKING POSITION, FURTHER PROCESSING ACCORDING APPLICATION SPECIFICATION
6	PART REVISION INDEX
7	PART NUMBER
8	WAY NUMBER
9	MOLD CAVITY NUMBER
10	MATERIAL IDENTIFICATION
11	PRODUCTION DATE
12	USER MANUAL APTIV REFERENCE : PU268
13	20W CODING A AS SHOWN
14	WHITENING STRESS PERMISSIBLE, IF NO NEGATIVE EFFECT ON FUNCTION
15	SUPPLIER LOGO
16	ASSEMBLY DATE
17	PRODUCT CAN BE USED WITH COVER 35192068 (2)

(2)

KEY					
PART NUMBER	35192072	35192073	35192074	35192075	35192076
APTIV PART REVISION	02	02	02	02	02
PRODUCT MASS WITHOUT TERMINALS (g)	2.3	2.3	2.3	2.3	2.3
MECHANICAL CODING	CODING A : BLACK	CODING B : WHITE	CODING C : BLUE	CODING D : PURPLE	CODING Z : WATER BLUE
FOLLOWING SIDE VIEW	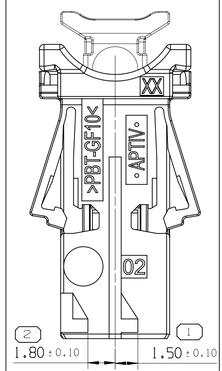	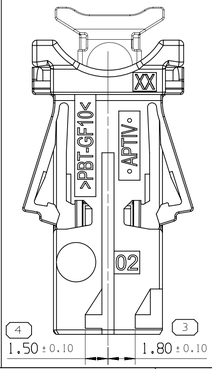	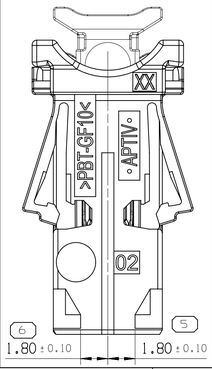	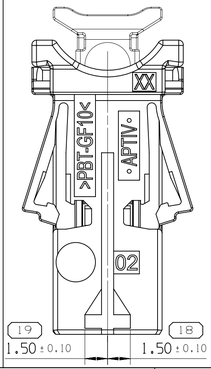	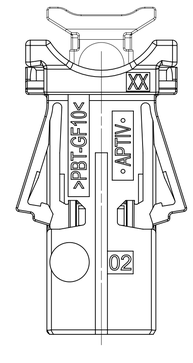
	(2) 1.80 ±0.10 (1) 1.50 ±0.10	(4) 1.50 ±0.10 (3) 1.80 ±0.10	(6) 1.80 ±0.10 (5) 1.80 ±0.10	(19) 1.50 ±0.10 (18) 1.50 ±0.10	

DWG STATUS DATE	STG	REV	N/P	CHG	ZONE	REVISION HISTORY	AUTH	DR	APVD 1	APVD 2
030C18	R	01	-			INITIAL RELEASE		C.SIV	R.PRA	L.DEL
25JL23	U	02			B4	CPA RETENTION IMPROVED NOTE 17 ADDED		G.VIM	G.UVA	R.SAV
22N023	U	03			D2	LASER MARKING WINDOW REMOVED		G.VIM	G.UVA	L.DEL

3D VIEW
SCALE 2:1

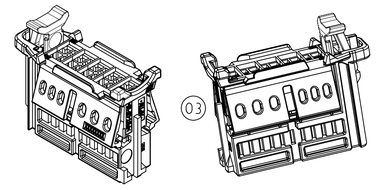

A LINE DRAWN THROUGH A PART NUMBER INDICATES THAT PHYSICAL PARTS ARE NOT AVAILABLE FOR ORDERING.

PART NUMBERS THAT DO NOT HAVE A LINE PRESENT INDICATE THAT PHYSICAL PARTS ARE AVAILABLE FOR ORDERING.

CONTACT APTIV SALES TO ASSURE AVAILABILITY OF PARTS.

R 0.1 MAX
R 0.2 MAX
SHARP CORNER TOLERANCE

DIM TO CHECK / ( ) DIM FOR HELP / THEORETIC DIM	DIMENSIONAL RANGE (MM) FROM TO	>0 20	>20 30	>30 70	>70 100	>100 150	>150 200	>200 250	>250 300	>300 400
	TOLERANCE UNLESS OTHERWISE SPECIFIED	±0.15	±0.2	±0.3	±0.4	±0.5	±0.6	±0.8	±1	±1.2
	ANGULAR TOLERANCE ±2°									

CHART E1

DWG TYP: CUSTOMER PART DRAWING
WEIGHT (GR): SEE TABLE
VOLUME (CM³)
ROUTING
DISTR CODE: D

UNLESS OTHERWISE SPECIFIED

GENERAL TOLERANCES ACCORDING TO: SEE NOTES

GD&T ACCORDING TO: ISO 1101

REFERENCE

FIRST ANGLE PROJECTION

DO NOT SCALE
USE MATH DATA

CAD NX

•APTIV•

CONNECTION SYSTEMS
Chennai, India

COPYRIGHT 2018 APTIV. ALL RIGHTS RESERVED.

THIS DRAWING IS THE PROPERTY OF APTIV AND CONTAINS APTIV CONFIDENTIAL INFORMATION. THE REPRODUCTION, DISTRIBUTION AND UTILIZATION OF THIS DOCUMENT OR ITS RELATED CAD MATH DATA, AS WELL AS COMMUNICATION OF ANY CONTENT TO OTHERS, WITHOUT EXPRESS AUTHORIZATION, IS PROHIBITED.

CE PLAN EST LE PROPRIETE DE APTIV ET CONTIENT DES INFORMATIONS APTIV CONFIDENTIELLES. LA REPRODUCTION, LA DISTRIBUTION ET L'UTILISATION DE CE DOCUMENT OU DE SES DONNÉES MATHÉMATIQUES CAO, AINSI QUE LA COMMUNICATION DE TOUT CONTENU À AUTRUI, SANS AUTORISATION EXPRESSE EST INTERDITE.

		DATE
DR	C.SIVA KUMAR	030C18
APVD1	R.PRASANNA	030C18
APVD2	L.DELESCLUSE	030C18
APVD3		
APVD4		
APVD5		

SUBSTANCES OF CONCERN AND RECYCLED CONTENT PER APTIV 10949001
MATIERES PROSCRITES ET CONTENU RECYCLABLE SELON APTIV 10949001

MATERIAL
PBT- GF10 (HOUSING) - FOR COLOR SEE TABLE
PBT- GF20 (CPA) - ORANGE

DRAWING NAME
20W FEMALE CONNECTOR 2 ROWS WITH CPA

DRAWING NUMBER
35192116

SIZE	SCALE	FRAME NO	SHEET NO	STG	REV	N/P
A1	5:1	1 OF 1	1 OF 1	U	03	-

CONTROLLED DOCUMENTS ARE ONLY AVAILABLE ON THE SERVER

User: g5692j Date: 01-Jul-24 Time: 15:22:46
Form: 35192116-CUS03-S01/03
LP14W070012024,1320,456pass,nonx326x9X