SYMBOL DEFINITION		
A DIMENSION WITHOUT AN INSPECTION REPORT SYMBOL [ ] DOES NOT REQUIRE INSPECTION. IT MAY BE CONTROLLED ON THE INDIVIDUAL COMPONENT DRAWING.	TOTAL NO OF INSPECTIONS REQUIRED	99
	LAST NO. USED	22

MISSING SYMBOLS
6-7

DWG STATUS DATE	STG	REV	N/P	C-G	ZONE	REVISION HISTORY	AUTH	DR	APVD 1	APVD 2
220CD4	R	01	-	-	-	ALL PARTS - CLEARED REV COL & REDRAWN TO PD	2b0292	ESH	JAA	RAP
275E06	R	02	-	-	-	ADDED SIDE VIEW TO TYPES 112,114,116, AND 118	2B4976	MM	MM	MC

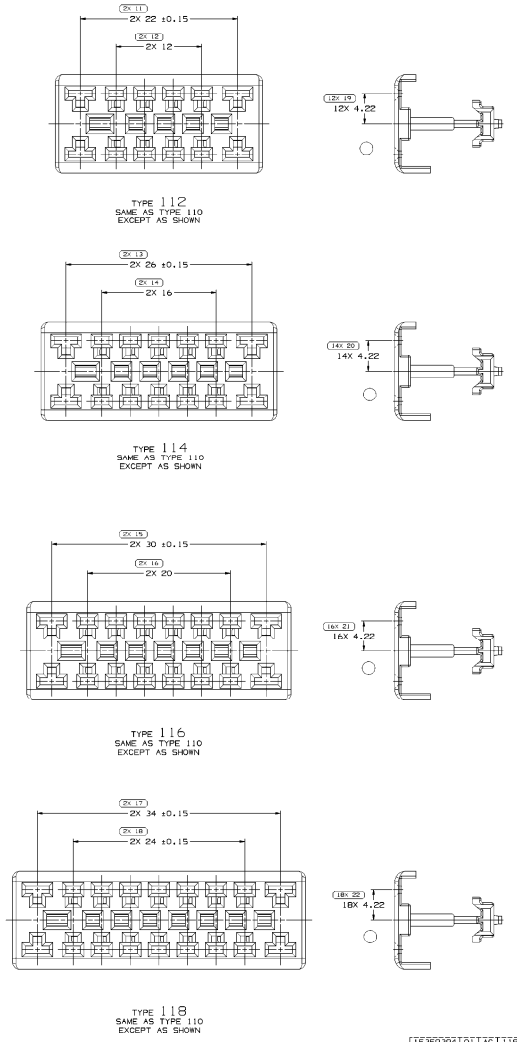

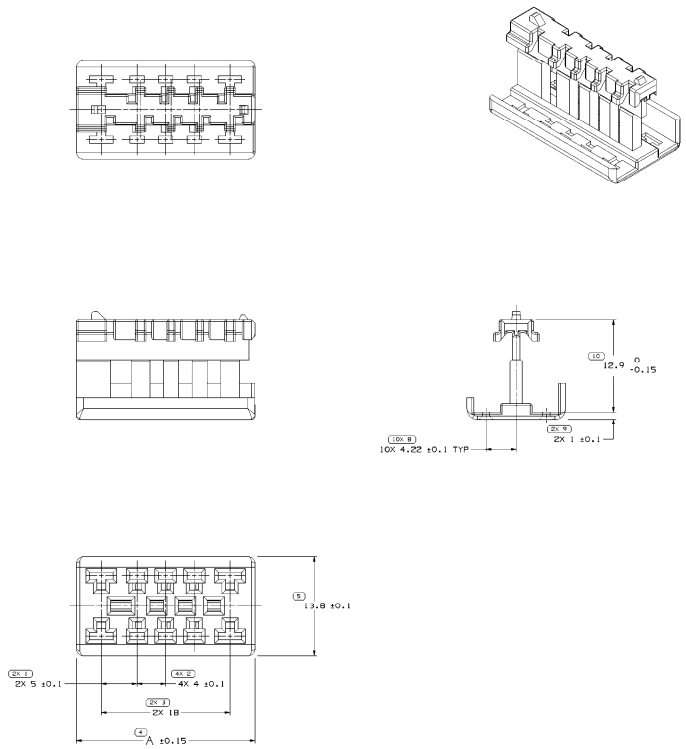

NOTES

1. UNLESS OTHERWISE SPECIFIED AND/OR INDICATED: DIMENSIONS ARE TO FACE OF VIEW SHOWN AND AUTOMATICALLY ROUNDED BY COMPUTER FOR INSPECTION (SEE MATH MODEL FOR PRECISE DIMENSIONS). FOR ALL OTHER DIMENSIONS NOT SHOWN BUT REQUIRED FOR TOOL BUILD, SEE MATH MODEL FOR PRECISE TOOL PATH DATA.
2. REFERENCE MATING COMPONENTS OR EQUIVALENT: SEE CHART

PART NO	REV	N/P	TYPE	DIMENSION A	USED IN ASSEMBLY	MATING CONNECTOR
15359394	01	AC	118	41	15359395	15359393
15336222	01	AC	116	37	15336219	15336218
15336214	01	AC	114	33	15336212	15336211
15336207	01	AC	112	29	15336205	15336204
15336200	01	AC	110	25	15336058	15336057

DIMENSIONS	RADIUS	ANG	FILLETS
FROM TO	>0-6 >6-30 >30-120 >120	>0-2 >2-50 >50-300 >300-400	>0-150 >150-250 >250-300 >300-400
	0 3	0 5	0 3

TOLERANCE UNLESS OTHERWISE SPECIFIED

LINEAR	ANGULAR
±0.15 ±0.2 ±0.3 ±0.4 ±0.5	±0.5 ±0.8 ±1 ±1.2

(4) PROCESS GEOMETRIC DIMENSION	DIMENSIONS WELDED TO 1 INDICATE MATERIAL CHANGE AND DO NOT MATCH ADJACENT PARTS

DWG TYPE	PART DRAWING
STYLE	
VOLUME, UOM	SYSTEM SIZE

UNLESS OTHERWISE SPECIFIED

THIS DRAWING IS TO INTERCHANGE WITH, AND IS TO CONFORM TO REQUIREMENTS OF THE ORIGINAL DRAWING(S) AND, IF APPLICABLE, THE ORIGINAL DRAWING(S) OF THE ASSEMBLY OF WHICH THIS PART IS A COMPONENT. DEVIATIONS MAY BE MADE ONLY BY WRITTEN AUTHORITY OF SYSTEM REPRESENTATIVE.

ALL DIMENSIONS ARE IN MILLIMETERS

REFERENCE

THIRD ANGLE PROJECTION

DO NOT SCALE

USE MATH DATA

DELPHI

DELPHI PACKARD ELECTRIC SYSTEMS
WARREN, OH

		DATE
DR		
APVD1	R. DILSEN	15JUN98
APVD2	A. SIKORA	16JUN98
APVD3	R. WIS.	16JUN98
APVD4		
APVD5		

SUBSTRATES OF CONCURN AND RECYCLED CONTENT PER DELPHI (09-4500)

MATERIAL
W2571008 PA6 0820-6F10 HS BLU

DRAWING NAME
TAXI LOCK PLR GT

DRAWING NUMBER
15336244

SIZE	SCALE	SHEET NO	TOTAL	REV	N/P
A0	5:1	1 OF 1	1 OF 1	R	02