SYMBOL DEFINITION		
A DIMENSION WITHOUT AN INSPECTION REPORT SYMBOL ( ) DOES NOT REQUIRE INSPECTION. IT MAY BE CONTROLLED ON THE INDIVIDUAL COMPONENT DRAWING.	TOTAL NO OF INSPECTIONS REQUIRED	23
	LAST NO. USED	23

MISSING SYMBOLS

NO MISSING SYMBOL NUMBER

DWG STATUS					ZONE	REVISION HISTORY	AUTH	DR	APVD 1	APVD 2
DATE	STG	REV	N/P	CHG						
11MY04	R	01	-	-		RELEASED	255159	ESH	FRG	MGR
09N004	R	01	AA	-		UPDATED THREAD TOLERANCE FOR NEW PLATING SPEC	261416	MJM	MJM	MR

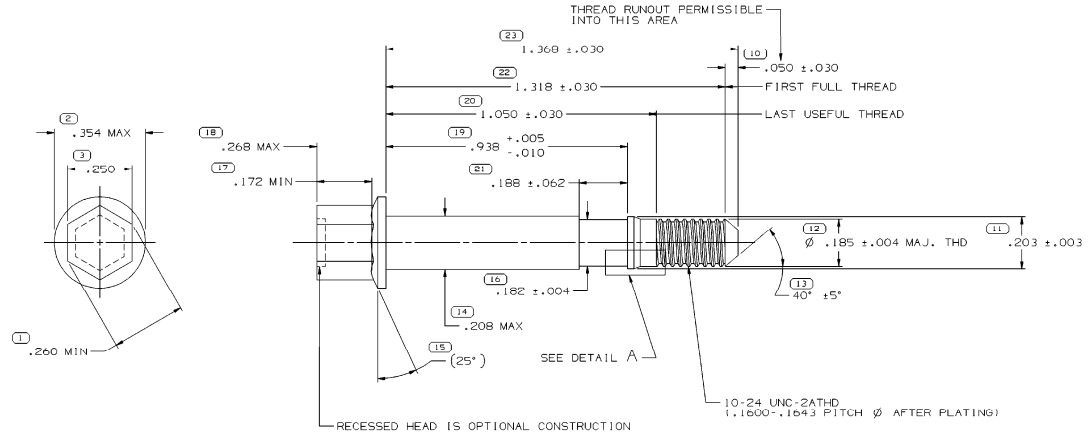

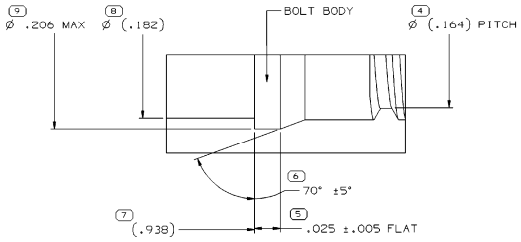

KNURL DETAIL A
SCALE 20:1

NOTES

1. UNLESS OTHERWISE SPECIFIED AND/OR INDICATED: DIMENSIONS ARE TO FACE OF VIEW SHOWN AND AUTOMATICALLY ROUNDED BY COMPUTER FOR INSPECTION (SEE MATH MODEL FOR PRECISE DIMENSIONS). FOR ALL OTHER DIMENSIONS NOT SHOWN BUT REQUIRED FOR TOOL BUILD, SEE MATH MODEL FOR PRECISE TOOL PATH DATA.
2. HARDNESS TO BE ROCKWELL "C" 25-32 (TO BE CHECKED ON THREADED END)
3. PLATED PER DX551245-P
4. PART MUST BE FREE OF RUST AND OILY GRIT.
5. MATING CONNECTOR BODY 12034162 OR EQUIVALENT. PART TO MATE 12034237 *10-24 THREAD INSERT OR EQUIVALENT.
6. BOLT MUST BE CAPABLE OF WITHSTANDING A MINIMUM OF 8.5 N-M (75 IN-LBS) OF TORQUE WITHOUT FAILURE.
7. MAXIMUM WEIGHT OF CARTON & CONTENTS SHALL NOT EXCEED 29 LBS. RECOMMEND 8X6X6 INCH CARTON WITH 1900 BOLTS.

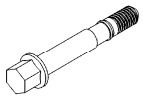

VIEW SCALE DOES NOT REFLECT ACTUAL PART SIZE

23 PROCESS SENSITIVE DIMENSION

DIMENSIONS ENCLOSED IN ( ) INDICATE REFERENCE DIMENSIONS AND NO TOLERANCE LIMITS ARE ESTABLISHED

DIMENSIONAL RANGE (IN)		CHART J
FROM	0	>500
TO	.500	

TOLERANCE UNLESS OTHERWISE SPECIFIED

±.005	±.010

ANGULAR TOLERANCE ±2°

DWG TYPE: PART DRAWING

STYLE

VOLUME (CM³)

DISTR CODE

UNLESS OTHERWISE SPECIFIED

THIS DOCUMENT IS IN ACCORDANCE WITH ASME Y14.5M-1994 AS AMENDED BY THE GM GLOBAL DIMENSIONING AND TOLERANCING AGENDA-2001. SEPARATE PATTERNS OF FEATURES MAY BE GAGED SEPARATELY REGARDLESS OF DATUM REFERENCES.

ALL DIMENSIONS ARE IN INCHES

REFERENCE

THIRD ANGLE PROJECTION

DO NOT SCALE

USE MATH DATA

UGS UNIGRAPHICS

DELPHI

DELPHI PACKARD ELECTRIC SYSTEMS
WARREN, OH

	DATE
DR	
APVD1 E. SALINAS	26MY04
APVD2 FCO. RESENDIZ	09JN04
APVD3 MATTHEW ROUSSEL	11JN04
APVD4	
APVD5	

SUBSTANCES OF CONCERN AND RECYCLED CONTENT PER DELPHI 10949001

MATERIAL
SAE 1038 STEEL

DRAWING NAME
MOUN BOLT HEX HD FLG

DRAWING NUMBER
15492534

SIZE	SCALE	FRAME NO	SHEET NO	STG	REV	N/P
A1	5:1	1 OF 1	1 OF 1	R	01	AA