SYMBOL DEFINITION		
A DIMENSION WITHOUT AN INSPECTION REPORT SYMBOL ( ) DOES NOT REQUIRE INSPECTION. IT MAY BE CONTROLLED ON THE INDIVIDUAL COMPONENT DRAWING.	TOTAL NO OF INSPECTIONS REQUIRED	12
	LAST NO. USED	8

MISSING SYMBOLS

NO MISSING SYMBOL NUMBER

DWG STATUS					ZONE	REVISION HISTORY	AUTH	DR	APVD 1	APVD 2
DATE	STG	REV	N/P	CHG						
28FE03	R	C2	-	-		CLEARED REV COL, REDRAWN TO PD, MAT'L SPEC WAS R0100109 PBT GRA AND ADDED LOGO CONST & MAT'L RECYCLING CODE NOTES	234419	EOV	EOV	ET

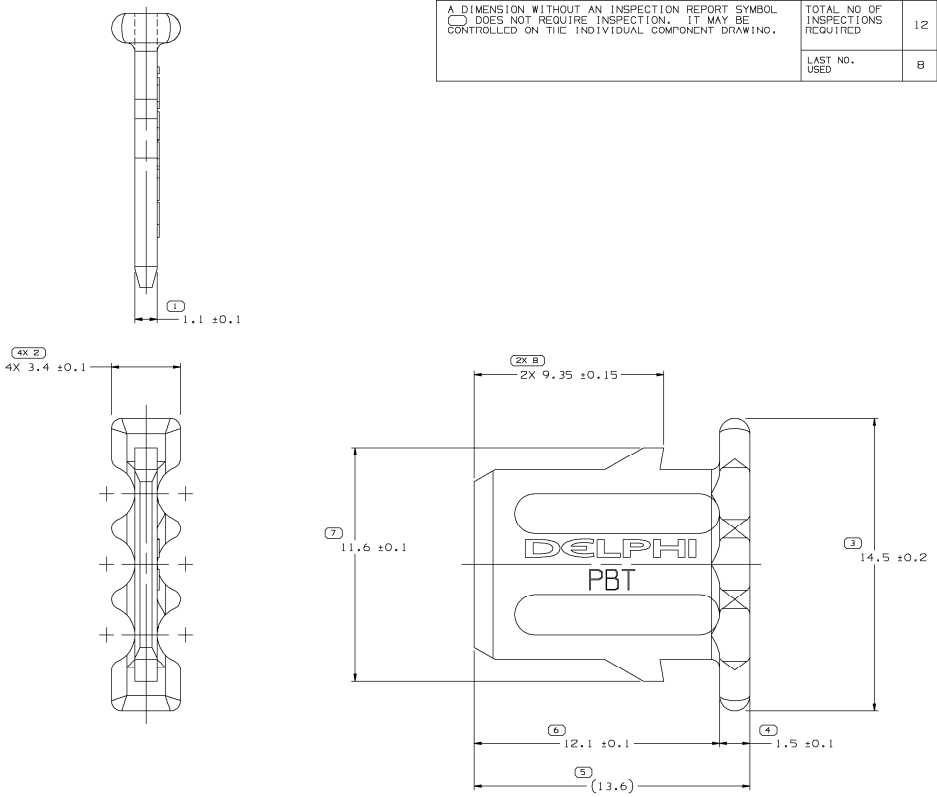

NOTES

1. UNLESS OTHERWISE SPECIFIED AND/OR INDICATED:
   DIMENSIONS ARE TO FACE OF VIEW SHOWN AND AUTOMATICALLY ROUNDED BY COMPUTER FOR INSPECTION (SEE MATH MODEL FOR PRECISE DIMENSIONS). FOR ALL OTHER DIMENSIONS NOT SHOWN BUT REQUIRED FOR TOOL BUILD, SEE MATH MODEL FOR PRECISE TOOL PATH DATA.

2. MATERIAL RECYCLING CODE >PBT< PER SAE J1344. (2.3)X(0.1) RAISED CHARACTERS AS SHOWN TO BE LOCATED ON ANY EXTERIOR SURFACE. OPTIONAL CONSTRUCTION TO BE NO MATERIAL RECYCLING CODE.

3. MATING COMPONENTS OR EQUIVALENT:
   CONNECTOR 12047782

4. (2.3)X(0.1) RAISED DELPHI CORPORATE BRAND TO BE LOCATED ON ANY EXTERIOR SURFACE, PREFERABLY VISIBLE AT FINAL ASSEMBLY. OPTIONAL CONSTRUCTION TO BE "PED" OR NO LOGO.

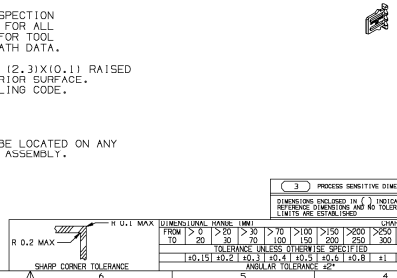

DIMENSIONAL RANGE (MM)										CHAM'L
FROM	> 0	> 20	> 30	> 70	> 100	> 150	> 200	> 250	> 300	±1
TO	20	30	70	100	150	200	250	300	400	
TOLERANCE UNLESS OTHERWISE SPECIFIED										
	±0.15	±0.2	±0.3	±0.4	±0.5	±0.6	±0.8	±1	±1.2	
ANGULAR TOLERANCE ±2°										

(3) PROCESS SENSITIVE DIMENSION

DIMENSIONS ENCLOSED IN ( ) INDICATE REFERENCE DIMENSIONS AND NO TOLERANCE LIMITS ARE ESTABLISHED

REFERENCE

THIRD ANGLE PROJECTION

DO NOT SCALE

USE MATH DATA

UNIGRAPHICS

DWG TYPE: PART DRAWING

STYLE

VOLUME (CM³): 0.133

DISTR CODE

ROUTING: 6900

UNLESS OTHERWISE SPECIFIED

THIS DOCUMENT IS IN ACCORDANCE WITH ASME Y14.5M-1994 AS AMENDED BY THE GM GLOBAL DIMENSIONING AND TOLERANCING STANDARD (TPS). THE GEOMETRIC TOLERANCES REPRESENTING DATUMS, TARGETS, FULL CONTROLLED FORM AT MMC, FUNCTIONAL GAGE, MATH DEFAULTS AND FEATURES IS ESTABLISHED BY ORIENTATION OR LOCATION TOLERANCES. SEPARATE POSITION CALLOUTS MAY BE GAGED SEPARATELY, REGARDLESS OF DATUM REFERENCE.

ALL DIMENSIONS ARE IN MILLIMETERS

DELPHI

DELPHI PACKARD ELECTRIC SYSTEMS
WARREN, OH

	DATE
DR	
APVD1 T.L. BOZIS	26JN86
APVD2 T. MUDREY	07JL86
APVD3 R. MAGA	17JL86
APVD4	
APVD5	

SUBSTANCES OF CONCERN AND RECYCLED CONTENT PER DELPHI 10949001

MATERIAL: M6595003 PBT GRA

DRAWING NAME: TPA M/P 150

DRAWING NUMBER: 12047784

SIZE	SCALE	FRAME NO	SHEET NO	STG	REV	N/P
A1	10:1	1 OF 1	1 OF 1	R	C2	-