SYMBOL DEFINITION		
A DIMENSION WITHOUT AN INSPECTION REPORT SYMBOL (□) DOES NOT REQUIRE INSPECTION. IT MAY BE CONTROLLED ON THE INDIVIDUAL COMPONENT DRAWING.	TOTAL NO OF INSPECTIONS REQUIRED	38
	LAST NO. USED	22

MISSING SYMBOLS
NO MISSING SYMBOL NUMBER

DWG STATUS DATE	STA	REV	N/P	DWB	ZONE	REVISION HISTORY	AUTH	DR	APVD 1	APVD 2
101100	R	001	-	-		CLEARED REV COLUMN: 1535916J - RELEASED	010105	JMR	PRC	MEN
080100	R	002	-	-		1535916J - TERMINAL FORM ID 21 WAS ID 19	230183	PRG	MAX	MEN
30JN00	R	003	-	-		1535916J - REV MAT'L SPEC	212037	TLP	TLP	ALD
15JN05	R	34	-	-		CORRECTED DIM LOCATION FOR DIM 2.6	262039	MJM	JMR	MEN
08DC06	R	35	-	-		REVISED MATERIAL SPEC-12191888,12191887 12077628, 12045773 WAS P3687402 AND 12077150 WAS PM03636	287631	MM	MM	MEN
29NO07	R	36	-	-		1365449G - RELEASED	402515	ETS	JMR	KGS
25APR8	R	37	-	-		ALL ACTIVE PARTS DIM 2X 4 MAX EXCLUDING COIN WAS 2X 3.6 +/- 0.15	434175	ARV	PP	ARV
22JA09	R	38	-	-		ALL ACTIVE PARTS - DIM 2.5 +.1/-.15 WAS +/-.10,ADDED NOTE TO DIM 2.5 +.1/-.15 & UPDATED MAT'L CALLOUT	447116	CSG	SDR	MEN
31JL12	R	39	-	-		12045773, 12077628, 12191887 & 12191888 - UPDATED PDM ATTRIBUTES	4/9/04	JRM	JRM	MAX
07AU12	R	10	-	-		1365449G, 1535916J AND 12177150 UPDATED MAT'L CALLOUT	4/9/93	DCH	JMR	MAX
19JN15	R	11	-	-		12191887, 12191888 MAKE OBSOLETE	429952	PCE	ESJ	ARV

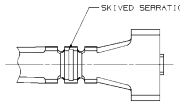

TYPE 102

SAME AS TYPE 101
EXCEPT AS SHOWN

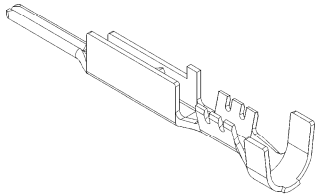

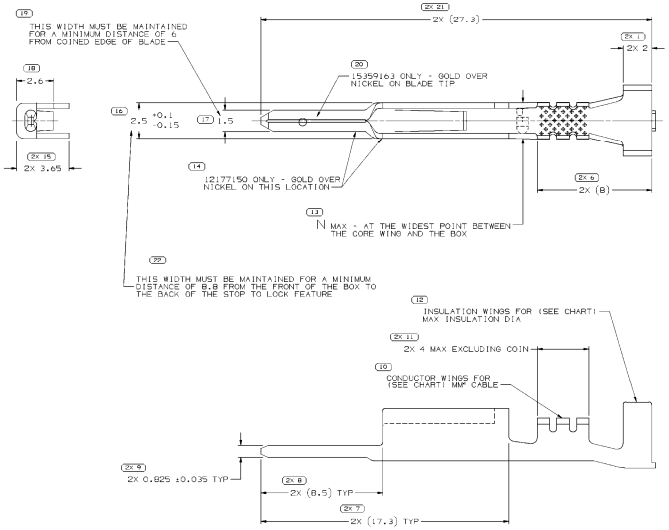

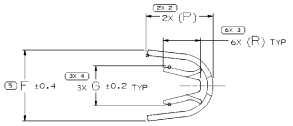

TYPE 101

NOTES

1. UNLESS OTHERWISE SPECIFIED AND/OR INDICATED:

   DIMENSIONS ARE TO FACE OF VIEW SHOWN AND AUTOMATICALLY ROUNDED BY COMPUTER FOR INSPECTION (SEE MATH MODEL FOR PRECISE DIMENSIONS). FOR ALL OTHER DIMENSIONS NOT SHOWN BUT REQUIRED FOR TOOL BUILD, SEE MATH MODEL FOR PRECISE TOOL PATH DATA.

2. REFERENCE MATING COMPONENTS OR EQUIVALENT:

   TERMINAL 12048074

3. PART TO BE USED WITH CABLE SEAL

								1365449G	01	AC	GOLD PLATED COPPER ALLOY	0.5 - 0.8	19	2.78 - 1.69	101	5	2.6	2.55	2.6	4.6
								1535916J	02	AE	GOLD PLATED COPPER ALLOY	0.35 - 0.5	21	2.4 - 1.47	101	5.92	2.4	2.55	2.1	4.7
								12194888	C7	-	COPPER ALLOY	0.35 - 0.5	21	2.4 - 1.47	101	5.92	2.4	2.55	2.1	4.7
								12191887	C7	-	COPPER ALLOY	0.5 - 0.8	19	2.78 - 1.69	101	5	2.6	2.55	2.6	4.6
								12177150	C5	-	GOLD PLATED COPPER ALLOY	0.5 - 0.8	19	2.78 - 1.69	101	5	2.6	2.55	2.6	4.6
								12077628	C5	-	COPPER ALLOY	0.35 - 0.5	21	2.4 - 1.47	101	5.92	2.4	2.55	2.1	4.7
								12048048	C	-	COPPER ALLOY	0.35	22	1.63 - 1.47	102	5.92	2.2	2.6	1.94	4.7
12048201	B2	-	0.381 X 35.71			COPPER ALLOY		12045773	H5	-	COPPER ALLOY	0.5 - 0.8	19	2.78 - 1.69	101	5	2.6	2.55	2.6	4.6
12048068	C2	-	0.381 X 35.71			COPPER ALLOY		PART NO	REV	N/P	MAT'L SPEC	SIZE (MM²)	ID	DIA						
PART NO	REV	N/P	MAT'L SIZE			MAT'L SPEC									TYPE	F	G	N	R	P
UNPLATED								PLATED				CABLE								

(L7) PROCESS INSPECTION STANDARDS	REFERENCE
DIMENSIONS ENCLOSED IN ( ) INDICATE REFERENCE DIMENSIONS. ALL OTHER DIMENSIONS ARE REFERENCE.	
DIMENSIONAL RANGE (MM)	CHART C
FROM TO	0 >12
TOLERANCE UNLESS OTHERWISE SPECIFIED	±0.25
ISSUE OR TOLERANCE C2	

THIRD ANGLE PROJECTION

DO NOT SCALE

USE MATH DATA

NX

THE DRAWING THEREON I FOR SUPPLIER INSPECTION THAT PHYSICAL PARTS ARE NOT AVAILABLE FOR CHECKING.

PART NUMBERS THAT DO NOT HAVE A LINE PRESENT INDICATE THAT PHYSICAL PARTS ARE AVAILABLE FOR CHECKING.

CONTACT ENGINE SALES TO ASSURE AVAILABILITY OF PARTS.

DWG TYPE: PART DRAWING

STYLE

RELEASE CONT: SCREEN CONT

UNLESS OTHERWISE SPECIFIED

THIS DRAWING IS IN ACCORDANCE WITH ASME Y14.5M-1994 UNLESS OTHERWISE SPECIFIED. DIMENSIONS ARE TO CALCULATED MINIMUM DATA. DIMENSIONS FOR LOCATIONS OF FEATURES ARE BY BASIC MATHEMATICAL RELATIONSHIPS OF DATUM REFERENCES.

ALL DIMENSIONS ARE IN MILLIMETERS

MATERIAL: SEE CHART

DRAWING TITLE: TAXI TERM M M/P 150 SEALED

DRAWING NUMBER: 12089630

SIZE	SCALE	TYPE	WT	SHEET NO	OF	REV	NEXT
AD	1:01	1		1 OF 1		R 11	-

DELPHI

DELPHI PACKARD ELECTRICAL/ELECTRONIC ARCHITECTURE

COPYRIGHT 1996 DELPHI AUTOMOTIVE SYSTEMS LLC ALL RIGHTS RESERVED.
THIS DRAWING IS THE PROPERTY OF DELPHI CORPORATION. THE INFORMATION, DISTRIBUTION OR REPRODUCTION OF THIS DRAWING IS PROHIBITED WITHOUT WRITTEN PERMISSION FROM DELPHI CORPORATION. STRICT EXPRESS AUTHORIZATION IS PROHIBITED.

		DATE
DR		
APVD1	R NOISEN M	04SEP96
APVD2	B. TURNBULL	07SEP96
APVD3	C. SCHAFFER	18DEC96
APVD4		
APVD5		

SUBSTANCES OF CONCERN AND RECYCLED
COPYSDP PCR DELPHI (REVISED)