SYMBOL DEFINITION		
A DIMENSION WITHOUT AN INSPECTION REPORT SYMBOL ( ) DOES NOT REQUIRE INSPECTION. IT MAY BE CONTROLLED ON THE INDIVIDUAL COMPONENT DRAWING.	TOTAL NO OF INSPECTIONS REQUIRED	41
	LAST NO. USED	41

MISSING SYMBOLS: 9 12-26 29 31-38 40

DWG STATUS DATE	STS	REC	IN/P	CHG	ZONE	REVISION HISTORY	AUTH	DR	APVD 1	APVD 2
11JN99	R	D1		-	-	WAS PE062908,REVISED & RELEASED	990035	EFW	WVA	DM
28JA00	R	D1		AA	-	REVISED DIMS(3 PLCS)	190531	JTC	WVA	DME
25FE00	R	D1		AB	-	ADDED & AS PROCESS SENSITIVE DIM	199388	JAH	JAH	DEM
29OC01	-	D1		AC	-	PDM ATTRIBUTES UPDATED	215041	HAW	HAW	DB
10DE04	R	I1		AD	-	UPDATED FORMAT; ADDED NOTES 3 & 4; AND MATL WAS R0100224	261803	DRB	DRB	ET
05MR12	R	I1		AE	-	REVISED GRAPHICS	417319	AHY	JVM	JRY
09MT12	R	I1		AF	-	REV BLOB #49 OF MRB,AUTH NUMBER 417319 AND REVISED GRAPHICS	418117	JBM	JVM	JRY
16MT12	R	I1		AG	-	ZX 11.4 +0.6/-0.3 WAS 2X 11.4 ±0.3 AND REVISED NOTE #2	418225	DAF	GEM	DAF

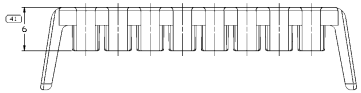

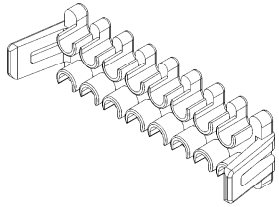

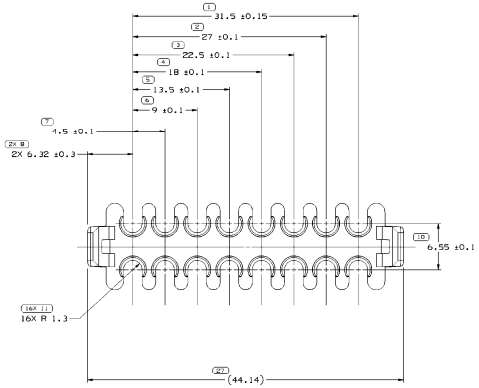

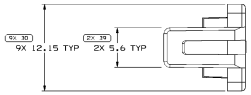

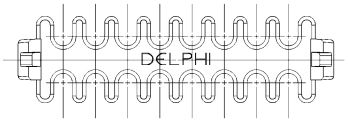

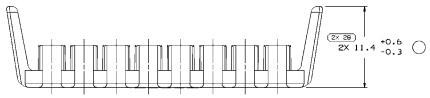

NOTES

1. UNLESS OTHERWISE SPECIFIED AND/OR INDICATED:

   DIMENSIONS ARE TO FACE OF VIEW SHOWN AND AUTOMATICALLY ROUNDED BY COMPUTER FOR INSPECTION (SEE MATH MODEL FOR PRECISE DIMENSIONS). FOR ALL OTHER DIMENSIONS NOT SHOWN BUT REQUIRED FOR TOOL BUILD, SEE MATH MODEL FOR PRECISE TOOL PATH DATA.

2. MATING COMPONENTS OR EQUIVALENT:
   CONNECTOR 15326862 & 15326867

3. MATERIAL RECYCLING CODE PER ISO 11469. (P,31X10.1) CHARACTERS AS SHOWN TO BE LOCATED ON ANY EXTERIOR SURFACE.

4. (11.21X10.1) DELPHI CORPORATE BRAND TO BE LOCATED ON ANY EXTERIOR SURFACE, PREFERABLY VISIBLE AT FINAL ASSEMBLY. OPTIONAL CONSTRUCTION FOR EXISTING TOOLING MAY BE "RED".

5. THIS PRODUCT IS NOT CATEGORIZED AS AN APPEARANCE ITEM. MINOR IMPERFECTIONS INCLUDING, BUT NOT LIMITED TO, FLOW MARKS, COLOR BLEMISHES, GATE VESTIGE, AND SOFT FLASH THAT DO NOT AFFECT THE FIT, FORM, OR FUNCTION OF THE PART ARE PERMISSIBLE PER DRNP-4.7-CS-01.

DWG TYPE: PART DRAWING

STYLE:

VOLUME (DM³): 1.103

SURFACE (DM²):

UNLESS OTHERWISE SPECIFIED
THIS DRAWING IS IN ACCORDANCE WITH ASME Y14.5M-1994 UNLESS OTHERWISE SPECIFIED. DIMENSIONS ARE TO BE CALCULATED MEANING THAT, DURING FUTURE FUTURING OF FEATURES BY BY BYRED BEFORE/ALT REFERENCES OF DATUM REFERENCES.

ALL DIMENSIONS ARE IN MILLIMETERS

(41) PROCESS INSPECTION STANDARDS
DIMENSIONS INCLUDED IN I.D. INSPECTS
DIMENSIONS INCLUDED IN I.D. AS TOLERANCE LIMITS ARE DEVELOPED.

REFERENCES

DIMENSIONS, RADIUS, DIAM.										
FROM	> 0	> 30	> 6	> 10	> 100	> 150	> 250	> 350	> 300
TO	30	6	10	100	150	250	350	300	400
TOLERANCE	±0.25	±0.1	±0.2	±0.3	±0.4	±0.5	±0.6	±0.7	±0.8

UNLESS OTHERWISE SPECIFIED
DIMENSIONS ARE IN MILLIMETERS
ANGLES ±0.5°
SURFACE FINISH 1.6 µm
DRAFT ±0.5°
DEBURR 0.1 MAX

THIRD ANGLE PROJECTION

DO NOT SCALE

USE MATH DATA

NX

DELPHI
DELPHI PACKARD ELECTRICAL/ELECTRONIC ARCHITECTURE
WARREN, OH
COPYRIGHT 1999 DELPHI AUTOMOTIVE SYSTEMS LLC
ALL RIGHTS RESERVED.
THIS DRAWING IS THE PROPERTY OF DELPHI CORPORATION. THE INFORMATION CONTAINED IN ITS USE, REPRODUCTION, DISTRIBUTION AND/OR UTILIZATION IS PROHIBITED WITHOUT THE EXPRESS WRITTEN CONSENT OF DELPHI CORPORATION. ANY COMMUNICATION OF THIS DRAWING TO OTHERS WITHOUT EXPRESS WRITTEN CONSENT IS PROHIBITED.

		DATE
DR		
APVD1	E.FLORES	11JN99
APVD2	MANUEL VEGA	15JN99
APVD3	M.D.MCEOWEN	28JN99
APVD4		
APVD5		

SUBSTANCES OF CONCERN AND RECYCLED CONTENT FOR DELPHI (GRAMS)

MATERIAL: POLYAMIDE COMPOUND PURPLE

DRAWING NAME: LOCK SECONDARY TPA GT

DRAWING NUMBER: 15358785

SIZE	SCALE	FRAME NO	SHEET NO	TOTAL	REV	INP
AD	5:1	1 OF 1	1 OF 1		R D1	A9