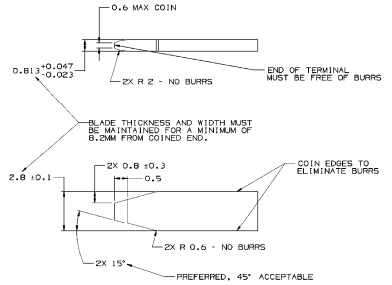

MATERIAL SPECIFICATIONS

RECOMMENDED

BASE METAL - CDA-210, GILDING, EXTRA SPRING TEMPER
PLATING - 0.0050 x 0.0025MM THICK TIN

MINIMUMS

ELECTRICAL CONDUCTIVITY - >20% IACS AT 20° C. USE OF A MATERIAL WITH CONDUCTIVITY <20% IACS MUST BE APPROVED BY PACKARD ELECTRIC MATERIALS ENGINEERING.

TENSILE STRENGTH - 407 MPa
PLATING - FOR LOW ENERGY (< 5V) AND NON-PASSENGER COMPARTMENT POWER CIRCUITS, 0.0050 x 0.0025MM THICK TIN. FOR MATERIALS CONTAINING 10% OR MORE ZINC, AN UNDERPLATE OF COPPER 0.0050 x 0.0025MM THICK IS REQUIRED.

MATING BLADE INFORMATION

SCALE 10:1

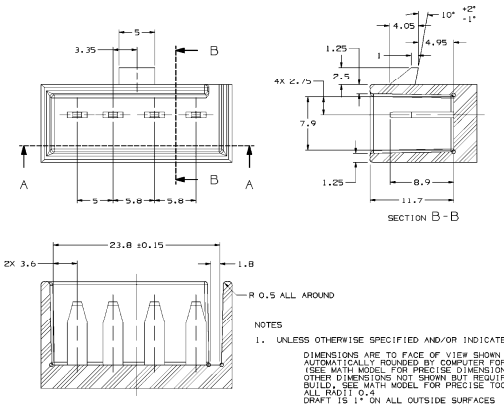

NOTES

1. UNLESS OTHERWISE SPECIFIED AND/OR INDICATED:

   DIMENSIONS ARE TO FACE OF VIEW SHOWN AND AUTOMATICALLY ROUNDED BY COMPUTER FOR INSPECTION (SEE MATH MODEL FOR PRECISE DIMENSIONS). FOR ALL OTHER DIMENSIONS NOT SHOWN BUT REQUIRED FOR TOOL BUILD, SEE MATH MODEL FOR PRECISE TOOL PATH DATA.
   ALL RADII 0.4
   DRAFT IS 1° ON ALL OUTSIDE SURFACES

MATING SWITCH DETAIL

SYMBOL DEFINITION			MISSING NUMBERS
A DIMENSION WITHOUT AN INSPECTION REPORT SYMBOL ( ) DOES NOT REQUIRE INSPECTION. IT MAY BE CONTROLLED ON AN INDIVIDUAL COMPONENT DRAWING	TOTAL NO. OF SYMBOLS ON DRAWING	13	
	LAST NO. USED	13	

DWG STATUS DATE	STA	REC	N/P	CHG	ZONE	REVISION HISTORY	AUTH	DR	APVD 1	APVD 2
24JAN1	R	C1	-	-		DELPHI STAMP WAS ADDED & PED STAMP CHANGED TO OPTIONAL CONSTRUCTION	295565	JDR	EDV	JA
27FEB1	R	C4	-	-		REVISED GRAPHICS	296711	JDR	EDV	JA
10SEP8	R	E4	-	-		UPDATED 280 CAVITY W/ LATEST ESD	258335	MJM	MJM	MP
13NOV8	R	E4	AA	-		UPDATED MAT'L CALLOUT	434035	KFS	FKV	WTM

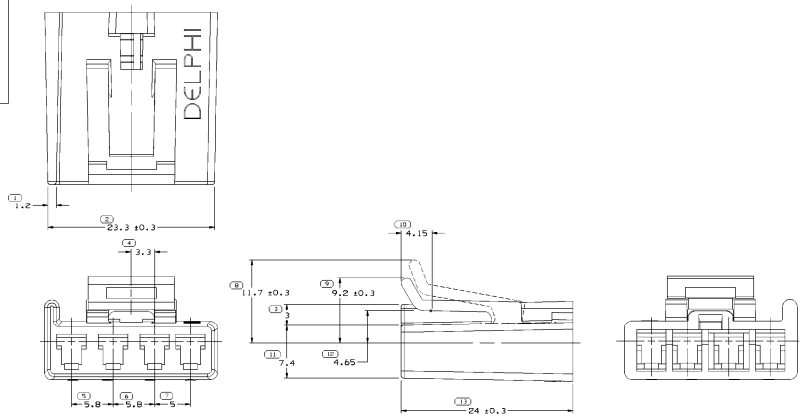

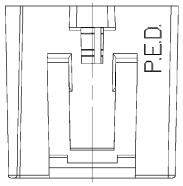

OPTIONAL CONSTRUCTION

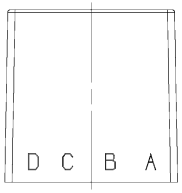

NOTES

1. UNLESS OTHERWISE SPECIFIED AND/OR INDICATED:

   DIMENSIONS ARE TO FACE OF VIEW SHOWN AND AUTOMATICALLY ROUNDED BY COMPUTER FOR INSPECTION (SEE MATH MODEL FOR PRECISE DIMENSIONS). FOR ALL OTHER DIMENSIONS NOT SHOWN BUT REQUIRED FOR TOOL BUILD, SEE MATH MODEL FOR PRECISE TOOL PATH DATA.
   LIKE CAVITIES ARE IDENTICAL
   LOCKING FEATURES ARE IDENTICAL

2. FOR APPLICATION DATA SEE THE APPLICATION DRAWING.
3. THIS PRODUCT IS NOT CATEGORIZED AS AN APPEARANCE ITEM. MINOR IMPERFECTIONS INCLUDING, BUT NOT LIMITED TO, FLOW MARKS, COLOR BLEMISHES, GATE VESTIGE, AND SOFT FLASH THAT DO NOT AFFECT THE FIT, FORM, OR FUNCTION OF THE PART ARE PERMISSIBLE PER DPNP-4.7-CS-01.

DWG TYPE	PART DRAWING
STYLE	
RELEASE DATE	2.5.04
DRAWN DWG	D

UNLESS OTHERWISE SPECIFIED
THIS DOCUMENT IS IN ACCORDANCE WITH ISO/IEC 11179-3 FOR DATA ELEMENTS, ISO 8601 FOR DATE FORMAT, ISO 639-2 FOR LANGUAGE CODES, ISO 3166-1 FOR COUNTRY CODES, ISO 4217 FOR CURRENCY, AND ISO 8859-1 FOR CHARACTERS. RETURNS 001 BY BYRD SUPPLIED PROBLEMS BY SYSTEM REFERENCE.

ALL DIMENSIONS ARE IN MILLIMETERS

REFERENCE

C 12 PROCESS INSPECTION STANDARDS
DIMENSIONS ENCLOSED IN ( ) INDICATE REFERENCE DIMENSIONS. ALL OTHER DIMENSIONS ARE TO BE TOLERANCED. LIMITS ARE DEFINED BY:

DIMENSIONAL TOLERANCE												
FRACTIONAL	±0	±30	±16	±8	±4	±100	±150	±250	±250	±300		
DEC	±0	±0	±0	±0	±0	±0	±0	±0	±0	±0		
ANGULAR	±0.25	±0.5	±1	±2	±5	±10	±15	±30	±45	±1	±1.5	

THIRD ANGLE PROJECTION

DO NOT SCALE

USE MATH DATA

NX

DELPHI

DELPHI PACKARD ELECTRICAL/ELECTRONIC ARCHITECTURE
WARREN, OH

		DATE
DR		
APVD1	P.LAUNDRIES	15JAN5
APVD2	F.HESTON	31JAN5
APVD3	F.MLAKED	25FEB5
APVD4		
APVD5		

SUBSTANCES OF CONCERN AND RECYCLED (EXCEPT FOR DELPHI) (ENGRD)

MATERIAL
POLYAMIDE COMPOUND BLACK

DRAWING NAME
CONN 4 F M/P 280

DRAWING NUMBER
12052856

SIZE	SCALE	TYPE	SHEET NO	OF	REV	N/P
AD	5:1	1	1 OF 1	1	R	04 AA