SYMBOL DEFINITION		
A DIMENSION WITHOUT AN INSPECTION REPORT SYMBOL (□) DOES NOT REQUIRE INSPECTION. IT MAY BE CONTROLLED ON THE INDIVIDUAL COMPONENT DRAWING.	TOTAL NO OF INSPECTIONS REQUIRED	13
	LAST NO. USED	13

MISSING SYMBOLS
NO MISSING SYMBOL NUMBER

DWG STATUS					ZONE	REVISION HISTORY	AUTH	DR	APVD1	APVD2
DATE	STR	REC	N/P	CHG					1	2
180617	R	01	-	-	-	CREATED PART DRAWING	4386-42	HHW	WG.L	AM

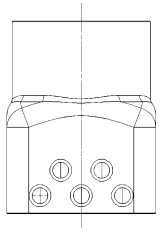

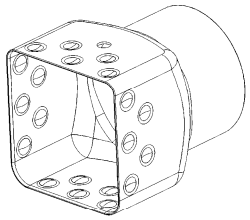

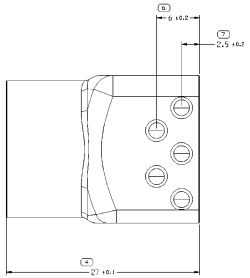

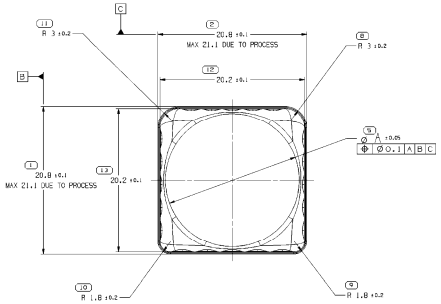

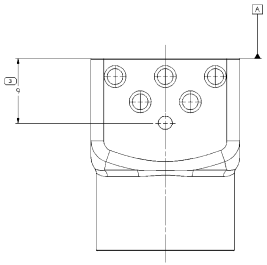

TYPE 101

NOTES

1. UNLESS OTHERWISE SPECIFIED AND/OR INDICATED:

   DIMENSIONS ARE TO FACE OF VIEW SHOWN AND AUTOMATICALLY ROUNDED BY COMPUTER FOR INSPECTION (SEE MATH MODEL FOR PRECISE DIMENSIONS). FOR ALL OTHER DIMENSIONS NOT SHOWN BUT REQUIRED FOR TOOL BUILD, SEE MATH MODEL FOR PRECISE TOOL PATH DATA.

2. PART MUST BE FREE OF BURRS,SHARP EDGE,OIL,GREASE OR OR OTHER CONTAMINANTS.

3. ALL DIMENSIONS ARE AFTER PLATING.

4. PLATING:
   NICKEL, 5.08-7.62µm PER ASTM B689, TYPE II, CLASS X.

5. THIS PART IS USED IN ASSEMBLY PARTS ON DRAWING 33357707.

6. PART MUST BE WATERPROOF PACKING.

7. ONLY CHAMFERED EDGE INCLUDING BUT NOT LIMITED TO, CAN BE SHARP. CONTACTS, MAIN BODY, SOLE, WASHER, AND SOFT ALUMINUM BOLT HOLES FREE OF BURRS. ALL SHARP EDGES OF THE PART ARE PERMISSIBLE PER DRNP-4.7-55-01.

7. PART MUST BE WATERPROOF PACKING.

8. IACS OF MATERIAL PERMITTED MIN. 24% .

PART NO	REV	N/P	DESCRIPTION	MATERIAL	VOLUME (CM³)	MATING INNER FERRULE	A	CABLE OD
35172727	01	-	OUTER FERRULE 25 MM²	COPPER ALLOY	0.558	35172724	15.1	12.2 $_{EA}$
35172728	01	-	OUTER FERRULE 35 MM²	COPPER ALLOY	0.571	35172725	17.3	14.4 $_{EA}$
35172729	01	-	OUTER FERRULE 50 MM²	COPPER ALLOY	0.579	35172726	18.7	15.8 $_{EA}$

THE DRAWING TEMPLATE FOR NUMBER 180101 THAT PHYSICAL PARTS ARE NOT AVAILABLE FOR ORDERING.

PART NUMBERS THAT DO NOT HAVE A LINE PRESENT INDICATE THAT PHYSICAL PARTS ARE AVAILABLE FOR ORDERING.

CONTACT DELPHI SALES TO ASSURE AVAILABILITY OF PARTS.

DWG TYPE: PART DRAWING

STYLE

VOLUME (CM³): SEE CHART

SCREW CONV.

UNLESS OTHERWISE SPECIFIED

THIS DRAWING IS IN ACCORDANCE WITH ISO 128-34 (PRN 128-34:2001) AND ISO 128-35 (PRN 128-35:2001) GENERAL PRINCIPLES OF PRESENTATION - GENERAL DRAWING PRINCIPLES. DIMENSIONS AND TOLERANCES AS PER ISO 8015:2011 FUNDAMENTAL TOLERANCING PRINCIPLE UNLESS OTHERWISE REFERENCED.

ALL DIMENSIONS ARE IN MILLIMETERS

PROCESS INSPECTION STANDARDS	REFERENCE
DIMENSIONS ENDORSED WITH A □ INDICATE CRITICAL DIMENSIONS. ALL OTHER DIMENSIONS ARE REFERENCE.	
DIMENSIONAL RANGE (MM) FROM 0 TO 3	CHART C >12
TOLERANCE UNLESS OTHERWISE SPECIFIED	ISO 2768
FINISH TOLERANCE	±0

THIRD ANGLE PROJECTION

DO NOT SCALE

USE MATH DATA

NX

DR	APVD1 HUIWEI HUANG	16JA18
	APVD2 METIOUC JIANG	16JA18
	APVD3 ARTHUR MA	16JA18
	APVD4	
	APVD5	

SUBSTANCES OF CONCERN AND RECYCLED

COPYRIGHT FOR DELPHI (GRANDEE)

MATERIAL: SEE CHART

DRAWING NAME: TAXI TERM FERRULE N1

DRAWING NUMBER: 33355943

SIZE	SCALE	FRAME NO	SHEET NO	TOTAL	REV	NOP
A0	5:1	1 OF 1	1 OF 1	1	R 01	-

DELPHI

DELPHI PROVIDED ELECTRICAL/ELECTRONIC ARCHITECTURE

SYMBOL 34
COPYRIGHT 2018 DELPHI AUTOMOTIVE LLP
ALL RIGHTS RESERVED.

THIS DRAWING IS THE PROPERTY OF DELPHI CORPORATION AND CONTAINS DETAILED CONFIDENTIAL INFORMATION. THIS DRAWING MUST NOT BE REPRODUCED OR DISTRIBUTED OR MADE AVAILABLE TO ANY PERSON OR ENTITY WITHOUT THE WRITTEN CONSENT OF DELPHI. NO RIGHTS, OWNERSHIP OR ANY INTEREST TO DRAWING WITHOUT EXPRESS AUTHORIZATION, IS GRANTED.