SYMBOL DEFINITION		
A DIMENSION WITHOUT AN INSPECTION REPORT SYMBOL ( ) DOES NOT REQUIRE INSPECTION. IT MAY BE CONTROLLED ON THE INDIVIDUAL COMPONENT DRAWING.	TOTAL NO OF INSPECTIONS REQUIRED	5
	LAST NO. USED	5

MISSING SYMBOLS

NO MISSING SYMBOL NUMBER

DWG STATUS					ZONE	REVISION HISTORY	AUTH	DR	APVD (INT.)	APVD (EXT.)
DATE	STR	REV	N/P	CHG						
08FEB05	R	B5	-	-	-	CLEARED REV COLUMN & REDRAWN TO PD	264552	ADK	ADK	JS

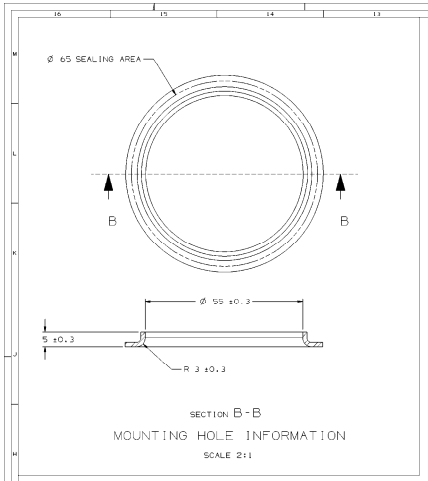

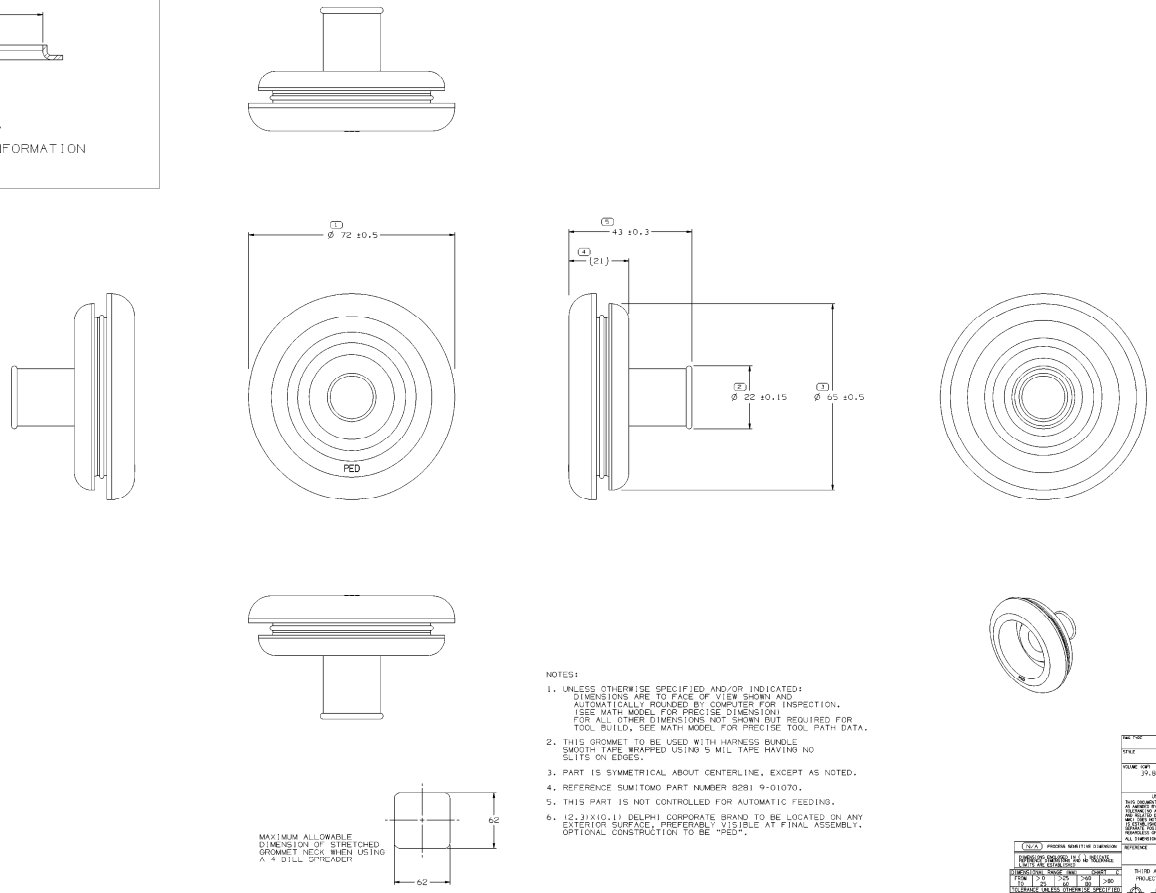

MAXIMUM ALLOWABLE DIMENSION OF STRETCHED GROMMET NECK WHEN USING A 4 DILL SPREADER

NOTES:

1. UNLESS OTHERWISE SPECIFIED AND/OR INDICATED:
   DIMENSIONS ARE TO FACE OF VIEW SHOWN AND AUTOMATICALLY ROUNDED BY COMPUTER FOR INSPECTION. (SEE MATH MODEL FOR PRECISE DIMENSION)
   FOR ALL OTHER DIMENSIONS NOT SHOWN BUT REQUIRED FOR TOOL BUILD, SEE MATH MODEL FOR PRECISE TOOL PATH DATA.
2. THIS GROMMET TO BE USED WITH HARNESS BUNDLE SMOOTH TAPE WRAPPED USING 9 MIL TAPE HAVING NO SLITS ON EDGES.
3. PART IS SYMMETRICAL ABOUT CENTERLINE, EXCEPT AS NOTED.
4. REFERENCE SUMITOMO PART NUMBER 8281 9-01070.
5. THIS PART IS NOT CONTROLLED FOR AUTOMATIC FEEDING.
6. (2.3)X(0.1) DELPHI CORPORATE BRAND TO BE LOCATED ON ANY EXTERIOR SURFACE, PREFERABLY VISIBLE AT FINAL ASSEMBLY. OPTIONAL CONSTRUCTION TO BE "PED".

(N/A) PROCESS SENSITIVE DIMENSION

DIMENSIONS SHOWN ARE FOR PRODUCT AS DELIVERED. DIMENSIONS ARE ESTABLISHED

DIMENSIONAL RANGE (MM)			CHART K
FROM	0.0	TO	250.0
FROM	250.0	TO	500.0

TOLERANCE UNLESS OTHERWISE SPECIFIED
± 0.25 ± 0.25 ± 0.25
ANGLE ± 0.25 ± 0.25

NAME TYPE	PART DRAWING
TITLE	
VOLUME (CUFT)	39.822
SYSTEM CODE	

UNLESS OTHERWISE SPECIFIED
THIS DOCUMENT IS AN ACCORDANCE WITH ASME Y14.5M-1994 UNLESS OTHERWISE SPECIFIED. ALL DIMENSIONS TOLERANCED PER DELPHI S-7001. ALL GEOMETRIC TOLERANCES AND DATUMS APPLY AT 68°F. ALL DIMENSIONS APPLY AT 68°F. ALL DIMENSIONS ARE FOR PRODUCT AS DELIVERED. DIMENSIONS ESTABLISHED BY INSPECTION OF PRODUCT FOR MEASUREMENT. SEPARATE VISITION CALLOUTS MAY BE CHECKED SEPARATELY. DIMENSIONS DO NOT APPLY TO MATERIAL.
ALL DIMENSIONS ARE IN MILLIMETERS

REFERENCE

12045255

THIRD ANGLE PROJECTION

DO NOT SCALE

USE MATH DATA

DELPHI

DELPHI PACKARD ELECTRIC SYSTEMS
WARREN, OH

	DATE
DR MFG1: RON BALDWIN	21MY07
MFG2: F. HESTON	20MY07
MFG3: K. GRZENA	08JN07
MFG4	
MFG5	

SUBSTANCES OF CONCERN AND RECYCLED CONTENT PER DELPHI 10MM001

MATERIAL
M4130002

DRAWING NAME

GROM TAPE ON

DRAWING NUMBER

12066591

SIZE	SCALE	FRAME NO	SHEET NO	STR	REV	N/P
A0	2:1	1 OF 1	1 OF 1	R	B5	-