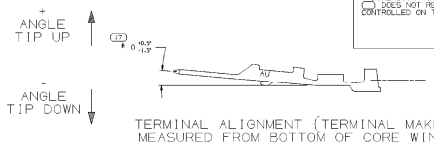
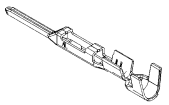


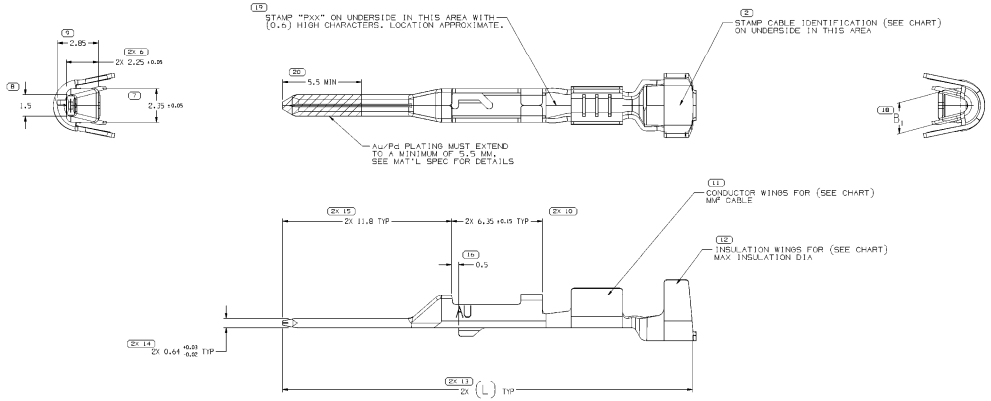
TERMINAL, SEAL AND CABLE ALIGNMENT
MEASURED FROM BOTTOM OF CORE CRIMP
SCALE 5:1

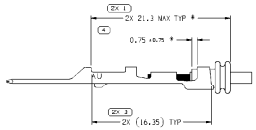


TERMINAL ALIGNMENT (TERMINAL MAKE)
MEASURED FROM BOTTOM OF CORE WING
SCALE 5:1



SCALE 5:1





TWO RIB SEAL POSITION REFERENCE
SCALE 5:1

NOTES

1. UNLESS OTHERWISE SPECIFIED AND/OR INDICATED:
   DIMENSIONS ARE TO FACE OF VIEW SHOWN AND AUTOMATICALLY ROUNDED BY COMPUTER FOR INSPECTION. (SEE MATH MODEL FOR PRECISE DIMENSIONING.) FOR ALL OTHER DIMENSIONS NOT SHOWN BUT REQUIRED FOR TOOL BUILD, SEE MATH MODEL FOR PRECISE TOOL PATH DATA.
2. "#" DENOTES DIMENSIONS MADE AT CUT-OFF AND CRIMP DIE .
3. MATING COMPONENTS OR EQUIVALENT:
   TERMINAL 15326426.
4. PLATING TYPE:
   I. GOLD OVER PALLADIUM AND NICKEL UNDERPLATE.
   II. MATTE TIN ELECTROPLATE OVER NICKEL UNDERPLATE.

PLATING TYPE INFORMATION SHOWN ABOVE IS REFERENCE ONLY. PLATING REQUIREMENTS ARE CONTAINED IN APPLICABLE MATERIAL SPECIFICATION.

SYMBOL DEFINITION		
A DIMENSION WITHOUT AN INSPECTION REPORT SYMBOL ( ) DOES NOT REQUIRE INSPECTION. IT MAY BE CONTROLLED ON THE INDIVIDUAL COMPONENT DRAWING.	TOTAL NO OF INSPECTIONS REQUIRED	27
	LAST NO. USED	20

MISSING SYMBOLS: NO MISSING SYMBOL NUMBER

DWG STATUS DATE	STR	REV	M/P	DIR	ZONE	REVISION HISTORY	AUTH	DR	APVD/APVD I	II
30JL02	R	35	-	-		CLEANED REV COLUMN ALL PARTS - UPDATED PDN ATTRIBUTES	228419	KDS	JAK	TJP
21JL03	R	36	-	-		ALL PARTS - ADDED TERMINAL MAKE STRIP-THICKNESS AND TERMINAL CRIMP STRIP-THICKNESS VIEWS.	242518	JPB	DRB	WC
04OCT04	R	37	-	-		ALL PARTS - ADDED STAMP DIE I.D.	259330	JPB	JWM	MKM
01DEC08	R	38	-	-		ALL PARTS - UPDATED MAT'L CALLOUT	436833	MH	FYP	MH
30APR10	R	39	-	-		ALL PARTS - UPDATED PDN ATTRIBUTES	4.0250	FRE	FRE	AMR
16AUG	R	10	-	-		ALL PARTS - ADDED PLATING NOTE; UPDATED CRIMP AREA COLUMN; ADDED CONTACT AREA & CRIMP AREA COLUMNS ON CHART	4.1639	ESC	ESC	AMR
06OCT10	R	11	-	-		ALL PARTS - UPDATED PLATING NOTES	4.21219	CBO	CBO	AMR
23AUG11	R	12	-	-		ALL PARTS - ALTERNATIVE MAT'L SIZE WAS MAT'L SIZE AND ADDED PREFERRED MAT'L SIZE COLUMN	4.51383	KJM	JAM	DAF
19OCT16	R	13	-	-		ALL PARTS - OBSOLETE AND ADDED REPLACED BY COLUMN	434568	APB	APB	LES
07MAY18	R	14	-	-		33340450-51 - WERE ON TAXI DRAWING 33357480 SHEET 11; ADDED "REPLACED BY" COLUMN; REMOVED "PLATED PROFORM" COLUMN & "REPLACES" INFO; UPDATED PART AVAILABILITY AND RESTRICTED. 15373402-03 - REINSTATED; ADDED CROSSHATCH TO BLADE & "PLATING" CALLOUT; ADDED "PLATED PROFORM" COLUMN & "REPLACED BY" INFO; REMOVED "TYPE" COLUMN. ALL PARTS - ADDED "AU" STAMP & DIN #20	439766	LB	LS	AMR
05JN18	R	15	-	-		33340450-51 - UPDATED PART AVAILABILITY	440853	LB	LS	AMR

PART NO	REV	M/P	RESTRICTED USAGE	REPLACED BY	MAT'L SIZE	MATERIAL DESCRIPTION	SIZE (MM²)	ID	DIA ±0.05	B_1 ±0.2	ILI	APPLICATION	TYPICAL CABLE SEAL	TYPICAL SEALING CAVITY CONFIGURATION	CONTACT AREA PLATING TYPE (SEE NOTE 4)	CRIMP AREA PLATING TYPE (SEE NOTE 4)
PLATED							CABLE									
33340450	02	AA	RESTRICTED	15373403	0.3 X 35.75	COPPER ALLOY	0.75 - 1	17	2.25 - 1.7	2.65	28.15	SEALED (GT)	12191227 OR EQUIVALENT	Ø 4 ROUND	I	II
33340451	02	AA	RESTRICTED	15373402	0.3 X 35.75	COPPER ALLOY	0.35 - 0.5	21	1.85 - 1.2	2.1	28.15	SEALED (GT)	12191226 OR EQUIVALENT	Ø 4 ROUND	I	II
15373403	03	-	-	-	0.3 X 35.75	COPPER ALLOY	0.75 - 1	17	2.25 - 1.7	2.65	28.15	SEALED (GT)	12191227 OR EQUIVALENT	Ø 4 ROUND	I	II
15373402	03	-	-	-	0.3 X 35.75	COPPER ALLOY	0.35 - 0.5	21	1.85 - 1.2	2.1	28.15	SEALED (GT)	12191226 OR EQUIVALENT	Ø 4 ROUND	I	II

THIS DRAWING IS A DIGITAL REPRESENTATION OF A PHYSICAL DRAWING. ALL FEATURES, DIMENSIONS AND PROPERTIES SHOWN HEREON ARE TRUE REPRESENTATIONS OF THE PHYSICAL DRAWING.

PART DRAWING

STYLE

VOLUME (CM³) | DENSITY (GM/...)

UNLESS OTHERWISE SPECIFIED
DATA ACCURATE TO 3 PLACES WITH ONE PLACE ESTIMATED. ANGULAR DATA ACCURATE TO ONE DECIMAL PLACE. DATA FEATURES NOT SHOWN IMPROPERLY REMOVED BY SYSTEM REFERENCES.

ALL DIMENSIONS ARE IN MILLIMETERS

REFERENCE

THIRD ANGLE PROJECTION | DO NOT SCALE | USE MATH DATA

DR	DATE
APVD1 JOSE TAPIA	10NOV99
APVD2 TAUL MOYSEN	04DEC99
APVD3 MIKE J. DEMONICA	13DEC99
APVD4	
APVD5	

SUBSTANCES OF CONCERN AND RECYCLED CONTENT PER DELPHI SPECIFICATION

MATERIALS
SEE CHART

DRAWING NAME
TAXI TERM W GT 150 SEALED

DRAWING NUMBER
15304703

SIZE	SCALE	PHASE/WT	SHEET NO	QTY	REV	M/P
A0	10:1	1 OF 1	1 OF		R	15 -

DELPHI
DELPHI PACKARD ELECTRICAL/ELECTRONIC ARCHITECTURE
WARREN, OH
COPYRIGHT 1999 DELPHI AUTOMOTIVE SYSTEMS LLC
ALL RIGHTS RESERVED.
PACKARD ELECTRIC DIVISION
THIS DRAWING IS THE PROPRIETARY PROPERTY OF DELPHI CORPORATION AND CONTAINS ENTRUST CONFIDENTIAL INFORMATION. ACCEPTANCE OF THIS DRAWING CONSTITUTES AGREEMENT THAT NEITHER IT NOR THE INFORMATION CONTAINED IN IT WILL BE REPRODUCED OR USED WITHOUT THE EXPRESS PERMISSION OF DELPHI CORPORATION OR ITS SUBSIDIARIES OR AFFILIATES.