SYMBOL DEFINITION		MISSING SYMBOLS
A DIMENSION WITHOUT AN INSPECTION REPORT SYMBOL [ ] DOES NOT REQUIRE INSPECTION. IT MAY BE CONTROLLED ON THE INDIVIDUAL COMPONENT DRAWING.	TOTAL NO OF INSPECTIONS REQUIRED: 11	NO MISSING SYMBOL NUMBER
	LAST NO. USED: 10	

DWG STATUS DATE	STG	REV	N/P	C-G	ZONE	REVISION HISTORY	AUTH	DR	APVD 1	APVD 2
21NOV05	R	01	-	-	-	CLEARED REV COLUMNS ALL PARTS - REDRAWN TO M9	274555	GPS	PRO	EST
06MY07	R	02	-	-	-	ALL PARTS - REVISED NOTE #5 & MODEL ASM	401351	JS	JS	WTM

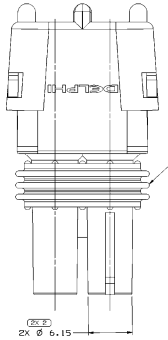

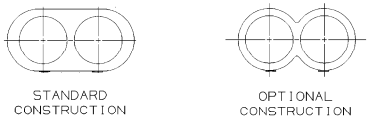

CABLE END VIEW OF CONNECTOR BODY

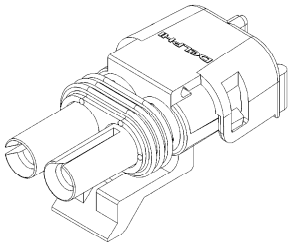

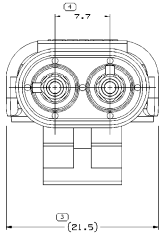

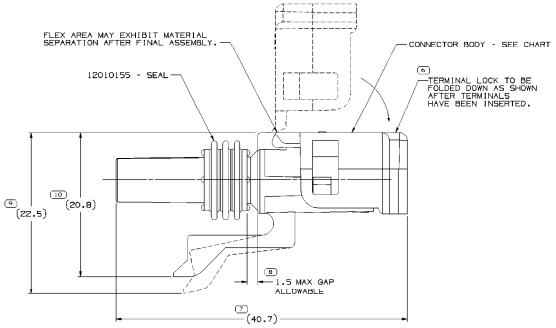

INDEX CODE
- 32 -
(ALSO SEE HANDBOOK)

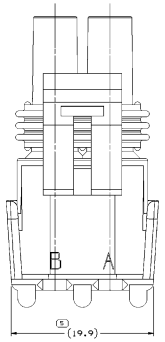

NOTES

1. UNLESS OTHERWISE SPECIFIED AND/OR INDICATED:

   DIMENSIONS ARE TO FACE OF VIEW SHOWN AND AUTOMATICALLY ROUNDED BY COMPUTER FOR INSPECTION (SEE MATH MODEL FOR PRECISE DIMENSIONS). FOR ALL OTHER DIMENSIONS NOT SHOWN BUT REQUIRED FOR TOOL BUILD, SEE MATH MODEL FOR PRECISE TOOL PATH DATA.

2. REFERENCE MATING COMPONENTS OR EQUIVALENT:

   MATING CONNECTOR - SEE CHART

3. THIS PART ACCEPTS THE FOLLOWING COMPONENTS OR EQUIVALENT:

   FEMALE TERMINAL 12089188 FOR IN-LINE APPLICATIONS
   MALE TERMINAL 12089040 FOR PANEL MOUNT APPLICATIONS
   CABLE SEAL 12015323

4. WHEN PARTS ARE SHIPPED THEY MUST BE PACKED IN PLASTIC BAGS OR SHIPPING CONTAINERS MUST BE LINED WITH PLASTIC LINERS. BAGS OR LINERS MUST BE SEALED TO AVOID FOREIGN MATTER.

5. SEALING CODE 3 - DESIGN WILL PASS SALT FOG AND IMMERSION TEST AFTER CONDITIONING AS SPECIFIED IN ESA-644 (WEATHER-PACK), WHEN MATED TO MATING PART OR EQUIVALENT

6. WHEN DESIGNING A PART TO MATE TO THIS WEATHER PACK CONNECTOR, REQUEST THE LAST COPY OF DRAWING NUMBER 12020084 FROM THE PACKARD ELECTRIC DIVISION.

ASSEMBLY PART NO	REV	N/P	STATUS	CONNECTOR BODY	STANDARD DESCRIPTION	REF APPLICATION	REF TERMINAL/GENDER	MATING PART
12103784	A3	-	-	12103782	ASM CONN 2F W/P TWR	IN-LINE	12089188/FEMALE	12034074
12015378	A3	-	-	12010810	ASM CONN 2M W/P TWR	DEVICE	12089040/MALE	DEVICE

DIMENSIONS (MM) FROM	0.5	1.20	1.5	2.5	3.15	6.3	10	15	20	30	50	80	120	200	300	400
TO	1.20	1.5	2.5	3.15	6.3	10	15	20	30	50	80	120	200	300	400	
TOLERANCE (MM) ±0.05	±0.08	±0.10	±0.15	±0.20	±0.25	±0.30	±0.35	±0.40	±0.50	±0.60	±0.70	±0.80	±0.90	±1.0	±1.2	

ANGULAR TOLERANCE ±2°

(N/A) PROCESS SENSITIVE DIMENSION
DIMENSIONS INSCRIBED IN ( ) INDICATE REFERENCE DIMENSIONS AND DO NOT REQUIRE INSPECTION.

REFERENCE

ALL DIMENSIONS ARE IN MILLIMETERS

THIRD ANGLE PROJECTION | DO NOT SCALE | USE MATH DATA | NX

DWG TYPE: PART DRAWING
STYLE
VOLUME: ASMY | SYSTEM: SMD

UNLESS OTHERWISE SPECIFIED
BOTH PROPRIETARY TO DELPHI INTERNATIONAL INC. (ALL RIGHTS RESERVED) AND THE DELPHI CORPORATION (ALL RIGHTS RESERVED). THIS DOCUMENT IS THE PROPERTY OF DELPHI INTERNATIONAL INC. AND THE DELPHI CORPORATION. FEATURES NOT SHOWN REQUIRED FOR TOOL BUILD, SEE MATH MODEL FOR PRECISE TOOL PATH INFORMATION.

DELPHI
DELPHI PACKARD ELECTRICAL/ELECTRONIC ARCHITECTURE
WARREN, OH

		DATE
DR		
APVD1	GERALD CHAPMAN	21NOV05
APVD2	GERALD CHAPMAN	21NOV05
APVD3	ALEX HERMANN	21NOV05
APVD4		
APVD5		

SUBSTITUTES OF CONCERN AND REVIEWED CONTENT PER DELPHI (D94900)

MATERIAL: SEE DRAWING

DRAWING NAME: TAXI ASM CONN W/P TWR SLD

DRAWING NUMBER: 12103785

SIZE	SCALE	FRAME	SHEET	STG	REV	N/P
A3	5:1	1 OF 1	1 OF 1	R	02	-