KEY PRODUCT CHARACTERISTICS

SAFETY/COMPLIANCE	FIT/FUNCTION	TOTAL ON DRAWING	0
S/C CHECKPOINTS	F/F CHECKPOINTS	LAST NO. USED	0

NO & TYPE	DESCRIPTION	RATIONALE	PTS	ZONE
- -	- -	- -	-	-

L_{ges}	L_3	L_2	L_1	B_2 ±0.1	B_1 ±0.1	H_2 ±0.2	H_1 ±0.2	B_2 ±0.2	B_1 ±0.2	PITCH TRANSP.	CABLE-TYPE LTG.-TYP	MATERIAL SLEEVE/UEBERFEDER WERKSTOFF	SURFACE SLEEVE/UEBERFEDER OBERFLAECHE	MATERIAL TERM.BODY/BASISTEIL WERKSTOFF	SURFACE TERM.BODY/BASISTEIL OBERFLAECHE	CROSS SECTION QUERSCH.	APPLICATION AUSFUEHRUNG	OKZ 1	ASSEMBLY PART-NO.	PART-REV	DATE DATUM
13.3	5.3	1.8	2.5	0.9	0.6	2.64	1.9	2.57	1.93	5.08	FLRY-B	X12CrNi177	BLANK	CuNiSi	f.Sn3	0.35-0.50	BASIC-APPLICATION	I	15440179	01	09AU04
13.3	5.3	1.8	2.5	0.9	0.8	3.23	2.52	2.82	2.57	10.16	FLRY-B	X12CrNi177	BLANK	CuNiSi	f.Sn3	0.60-0.75			15440181	01	09AU04
13.3	5.3	1.8	2.5	0.9	0.6	2.64	1.9	2.57	1.93	5.08	FLRY-B	X12CrNi177	BLANK	CuNiSi	sel.Au	0.35-0.50		III	15440183	01	09AU04
13.3	5.3	1.8	2.5	0.9	0.8	3.23	2.52	2.82	2.57	10.16	FLRY-B	X12CrNi177	BLANK	CuNiSi	sel.Au	0.60-0.75			15440185	01	09AU04
13.3	5.3	1.8	2.5	0.9	0.6	2.64	1.9	2.57	1.93	5.08	FLRY-B	X12CrNi177	BLANK	CuNiSi	twin-dot sel.Au	0.35-0.50	TWIN-DOT		---	---	---
13.3	5.3	1.8	2.5	0.9	0.8	3.23	2.52	2.82	2.57	10.16	FLRY-B	X12CrNi177	BLANK	CuNiSi	twin-dot sel.Au	0.60-0.75			---	---	---
13.9	5.9	2.0	2.5	1.55	0.6	3.29	1.9	3.79	1.93	10.16	FLRY-B	X12CrNi177	BLANK	CuNiSi	f.Sn3	0.35-0.50	SINGLE/SEALED-APPL.	I	---	---	---
13.9	5.9	2.0	2.5	1.55	0.8	3.29	2.52	3.79	2.57	10.16	FLRY-B	X12CrNi177	BLANK	CuNiSi	f.Sn3	0.60-0.75			---	---	---
13.9	5.9	2.0	2.5	1.55	0.6	3.29	1.9	3.79	1.93	10.16	FLRY-B	X12CrNi177	BLANK	CuNiSi	sel.Au	0.35-0.50		III	---	---	---
13.9	5.9	2.0	2.5	1.55	0.8	3.29	2.52	3.79	2.57	10.16	FLRY-B	X12CrNi177	BLANK	CuNiSi	sel.Au	0.60-0.75			---	---	---
13.3	5.3	1.8	2.5	0.9	0.6	2.64	1.9	2.57	1.93	5.08	FPC	X12CrNi177	BLANK	CuNiSi	f.Sn3	---	FPC-APPLICATION	I	---	---	---
13.3	5.3	1.8	2.5	0.9	0.6	2.64	1.9	2.57	1.93	5.08	FPC	X12CrNi177	BLANK	CuNiSi	sel.Au	---		III	---	---	---

DWG STATUS DATE	STG	REV	N/P	CHG	ZONE	REVISION HISTORY	AUTH	DR	APVD 1	APVD 2
09AU04	R	01				INITIAL RELEASE / FREIGABE		M.SAC	E.CVA	R.WIS
04FE14	R	02				REMARKS FOR PART IDENTIFICATION ADDED BEMERKUNGEN FUER TEILEBESCHRIFTUNG HINZU		K.BRA	M.PHI	SYS
27SE17	R	02	AA		C13	REMARK FOR FPC PART ADDED BEMERKUNG FUER FPC PART HINZU		M.PHI	R.GUT	SYS

BASIC APPLICATION / STANDART VARIANTE

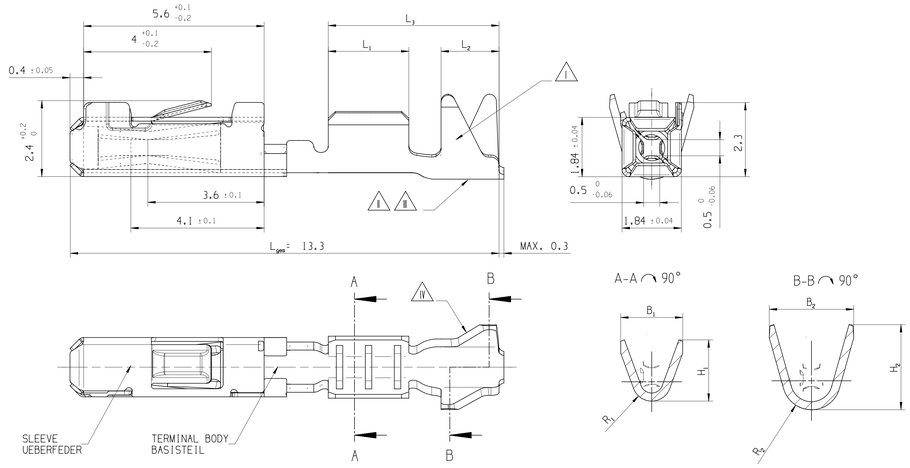

SINGLE CONDUCTOR SEALED / EINZELADER GEDICHTETE VARIANTE

MISSING DIMENSIONS AND DETAILS SEE BASIC APPLICATION
FEHLENDE MASSE UND ANGABEN SIEHE STANDART VARIANTE

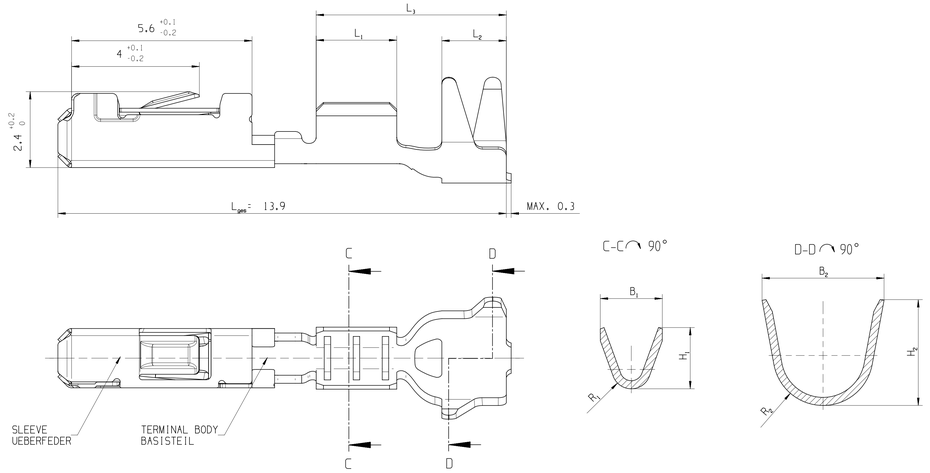

FLEXIBLE-PRINTED-CICURIT APPLICATION / FPC VARIANTE

MISSING DIMENSIONS AND DETAILS SEE BASIC APPLICATION
FEHLENDE MASSE UND ANGABEN SIEHE STANDART VARIANTE

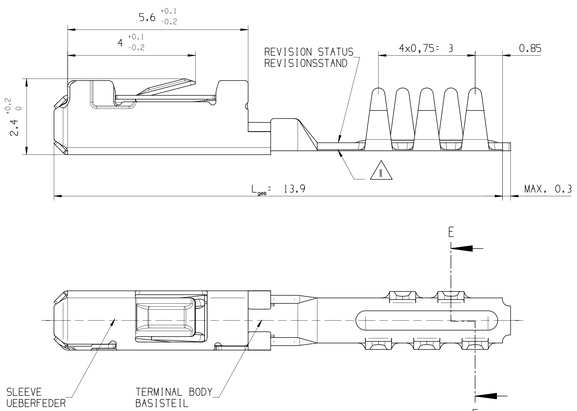

VIEW OF THE CARRIER STRIP
IS NOT IN SCALE
ABBILDUNG DES ANBINDUNGS-
STREIFENS NICHT MASSTAEBLICH

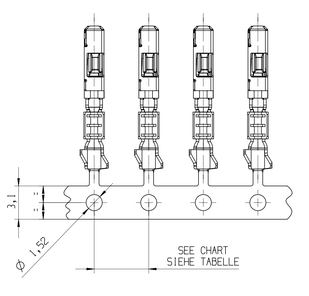

REMARKS / BEMERKUNGEN

- SURFACE-INDEX: Sn= I / Au= III
  OBERFLAECHENKENNZEICHNUNG: Sn= I / Au= III
- COMPANY LABEL
  FIRMENZEICHEN
- DATE CODE: WWYY
  DATUMSCODE: WWJJ
- REVISION STATUS OUTSIDE OF ISOCRIMP
  REVISIONSSTAND IM AUSSENBEREICH ISOCRIMP

SCALE/MASSSTAB 5:1

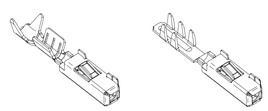

DWG TYP: PART DRAWING
WEIGHT (GR)
VOLUME (CM³)
ROUTING
DISTR. CODE: D

UNLESS OTHERWISE SPECIFIED

GENERAL TOLERANCES ACCORDING TO: SEE CHART SIEHE TABELLE

GD&T ACCORDING TO: ISO 1101

REFERENCE

FIRST ANGLE PROJECTION

DO NOT SCALE

USE MATH DATA

A — LINE DRAWN THROUGH A PART NUMBER INDICATES THAT PHYSICAL PARTS ARE NOT AVAILABLE FOR ORDERING.

PART NUMBERS THAT DO NOT HAVE A LINE PRESENT INDICATE THAT PHYSICAL PARTS ARE AVAILABLE FOR ORDERING.

CONTACT APTIV SALES TO ASSURE AVAILABILITY OF PARTS.

MIT EINER LINE DURCHGESTRICHENE PART-NR GEKENNZEICHNET, DASS DIESE PART-NR NICHT BESTELLT WERDEN KANN

PART-NR DIE KEINE LINE ZEIGEN, KENNZEICHNEN, DAS TEILE ZUR BESTELLUNG VERFUEGBAR SIND

FUER VERFUEGBARKEIT DER PARTS DEN EINKAUF VON APTIV KONTAKTIEREN.

	DIMENSIONAL RANGE (MM)	CHART D
DIM TO CHECK PRUEFMASSE	FROM 0	>12
DIM FOR HELP HILFSMASSE	TO 12	
THEORETIC DIM. THEORE. MASSE	TOLERANCE UNLESS OTHERWISE SPECIFIED ±0.1 / ±0.2	
	ANGULAR TOLERANCE ±2°	

DELPHI
CONNECTION SYSTEMS
D-42119 WUPPERTAL
COPYRIGHT 2004 DELPHI CORPORATION AND/OR ITS AFFILIATES.
ALL RIGHTS RESERVED.
REVISED 2017
THIS DRAWING IS THE PROPERTY OF DELPHI CORPORATION AND CONTAINS DELPHI CONFIDENTIAL INFORMATION. THE POSSESSION AND USE, REPRODUCTION AND UTILIZATION OF THIS DOCUMENT OR ITS RELATED CAD MASTER DATA, AS WELL AS COMMUNICATION OF ANY CONTENT TO OTHERS, WITHOUT EXPRESS AUTHORIZATION, IS PROHIBITED.

DESE ZEICHNUNG IST EIGENTUM DER FIRMA DELPHI UND ENTHAELT DELPHI VERTRAULICHE INFORMATIONEN. DIE REPRODUKTION, VERTEILUNG UND NUTZUNG DIESES DOKUMENTES ODER DEREN ZUGEHOERIGEN CAD DATEN, ODER AUCH ALS KOMMUNIKATION VON BELEGGEN INHALT ZU ANDEREN, IST OHNE BERECHTIGUNGSPRUEFUNG DURCH DIE DELPHI CORPORATION UNZULAESSIG.

		DATE
DR	M.SACH	09AU04
APVD1	E.CVASA	09AU04
APVD2	R.WISNIEWSKI	10AU04
APVD3		
APVD4		
APVD5		

SUBSTANCES OF CONCERN AND RECYCLED CONTENT PER DELPHI 10949001
POTENTIELL GEFAEHRLICHE STOFFE UND REZYKLATANTEIL GEMAESS DELPHI 10949001

MATERIAL: SEE CHART / SIEHE TABELLE

DRAWING NAME:
MICRO TERMINAL SYSTEM II 0.64
FEMALE TERMINAL, VERSION II

MICRO TERMINAL SYSTEM II 0.64
STECKHUELSE, AUSFUEHRUNG II

DRAWING NUMBER: 15440177

SIZE	SCALE	FRAME NO	SHEET NO	STG	REV	N/P
A0	5:1	1 OF 1	1 OF 1	R	02	AA

CONTROLLED DOCUMENTS ARE ONLY AVAILABLE ON THE SERVER

Date: 17-Jun-19 Time: 11:45:29
User: L.Gmbh
Expes: L_15440177_01_02.prt
Path: C:\Users\Gmbh\Desktop\