SYMBOL DEFINITION			MISSING NUMBERS
A DIMENSION WITHOUT AN INSPECTION REPORT SYMBOL ( ) DOES NOT REQUIRE INSPECTION. IT MAY BE CONTROLLED ON AN INDIVIDUAL COMPONENT DRAWING.	TOTAL NO. OF SYMBOLS DRAWING	13	
	LAST NO. USED	27	

DWG STATUS					ZONE	REVISION HISTORY	AUTH	DR	APVD I.T.E.	APVD J.A.R.
DATE	STR	REV	N/P	CHG						
05APD5	R	A5	-	-		CLEARED REV COL AND UPDATED MATERIAL SPEC	265705	DPS	JAA	CSD

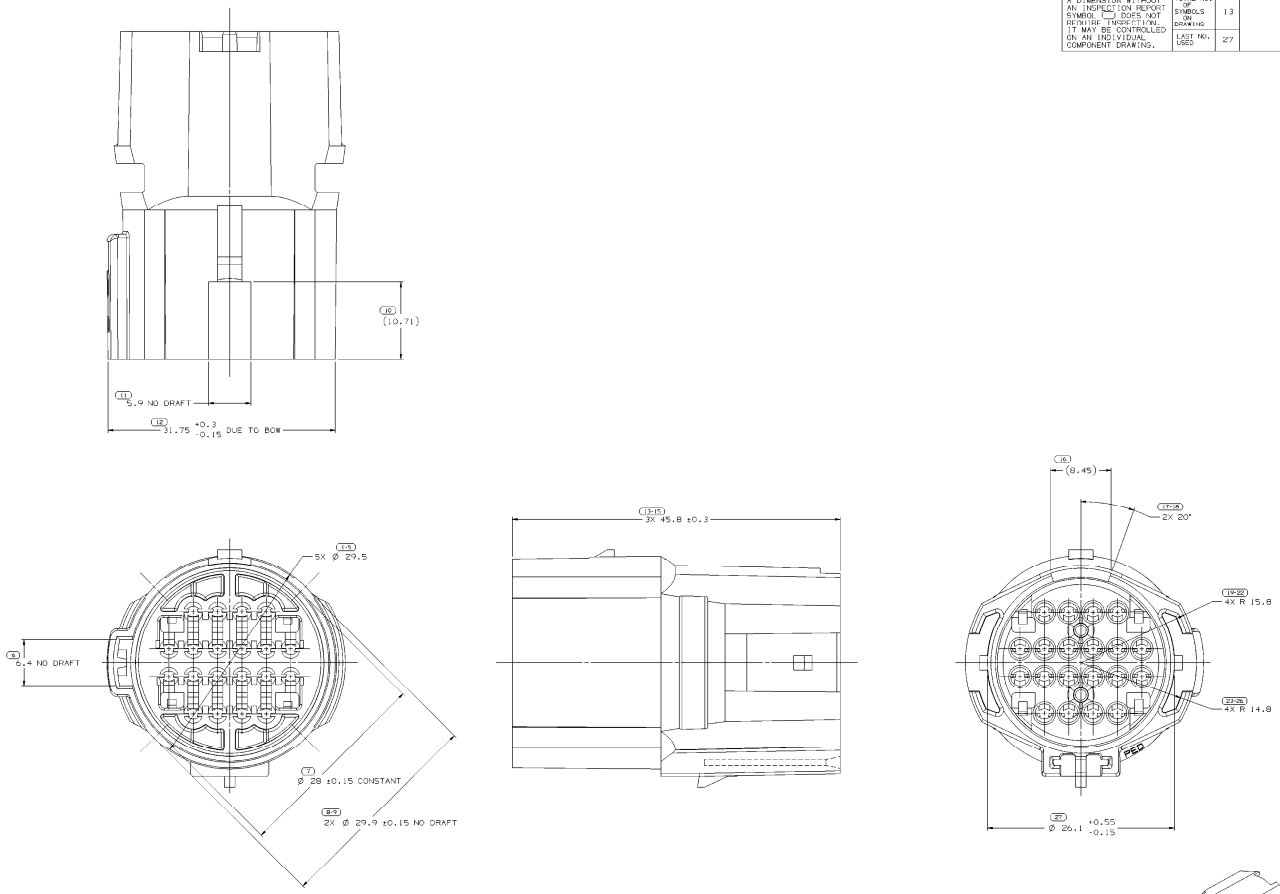

NOTES

1. UNLESS OTHERWISE SPECIFIED AND/OR INDICATED:

   DIMENSIONS ARE TO FACE OF VIEW SHOWN AND AUTOMATICALLY ROUNDED BY COMPUTER FOR INSPECTION (SEE MATH MODEL FOR PRECISE DIMENSIONS). FOR ALL OTHER DIMENSIONS NOT SHOWN BUT REQUIRED FOR TOOL BUILD, SEE MATH MODEL FOR PRECISE TOOL PATH DATA.

2. REFERENCE MATING COMPONENTS OR EQUIVALENT:

   CONNECTOR 12160280
   LOCK ASSIST/SEAL MOLD-OVER 12146394

3. MATERIAL RECYCLING CODE PER ISO 11469. (1.31X(0.1) CHARACTERS AS SHOWN TO BE LOCATED ON ANY EXTERIOR SURFACE.

4. (1.31X(0.1) DELPHI CORPORATE BRAND TO BE LOCATED ON ANY EXTERIOR SURFACE, PREFERABLY VISIBLE AT FINAL ASSEMBLY. OPTIONAL CONSTRUCTION FOR EXISTING TOOLING MAY BE "PED".

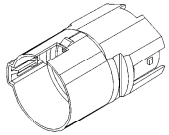

VIEW SCALE DOES NOT REFLECT ACTUAL PART SIZE

(27) PROCESS SENSITIVE DIMENSION
CONNECTOR CONTACTS TO BE PLATED WITH 0.25 MICRON MINIMUM GOLD OVER 1.27 MICRON MINIMUM NICKEL

DIMENSIONAL RANGE (MM)												
FROM	0.0	3.00	6.00	10.00	30.00	100.00	200.00	300.00	400.00			
TO	3.00	6.00	10.00	30.00	100.00	200.00	300.00	400.00				
ALLOWANCE (MM)												
±0.15	±0.20	±0.25	±0.30	±0.40	±0.50	±0.60	±1	±1.2				

ANGLE ALLOWANCE ±2°

THIRD ANGLE PROJECTION

DO NOT SCALE

USE MATH DATA

FORM TYPE	PART DRAWING
TITLE	
VOLUME (CUFT)	(0.12)
SYSTEM CODE	

UNLESS OTHERWISE SPECIFIED THIS DOCUMENT IS AN INTERPRETATION OF ASME Y14.5M-1994 DIMENSIONING AND TOLERANCING. DELPHI PROPRIETARY INFORMATION. REPRODUCTION, DISTRIBUTION OR DISCLOSURE TO THIRD PARTIES WITHOUT EXPRESS WRITTEN PERMISSION IS STRICTLY PROHIBITED.

ALL DIMENSIONS ARE IN MILLIMETERS

REFERENCE

DELPHI

DELPHI PACKARD ELECTRIC SYSTEMS
WARREN, OH

		DATE
DR	MFV01 E. FLORES	1JAP00
APVD	MFV02 P. H. CASTRILLON	29APD0
APVD	MFV03 G. CRANTES	16JN00
APVD4		
APVD5		

SUBSTANCES OF CONCERN AND RECYCLED CONTENT PER DELPHI 12094903

MATERIAL
MJ5740025 PA66 HS IM GRA MD

DRAWING NAME
CONN 20 M MIC/P 100W GRA MD SLD

DRAWING NUMBER
12160542

SIZE	SCALE	TYPNAC NO	SHEET NO	STR	REV	N/P
AD	5:1	1 OF 1	1 OF 1	R	A5	-