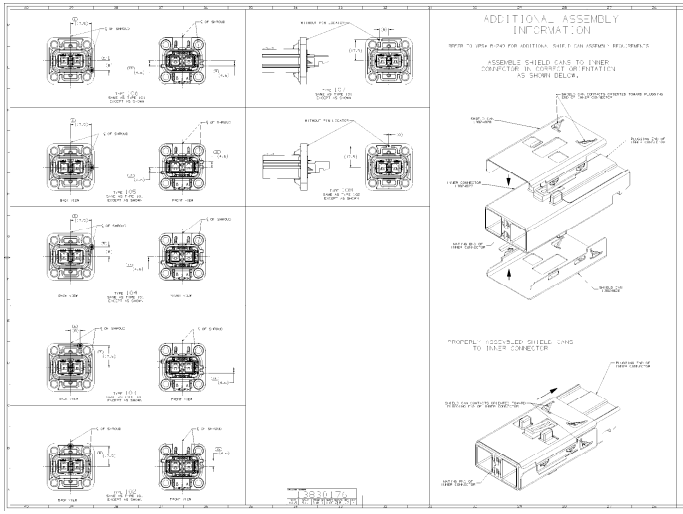
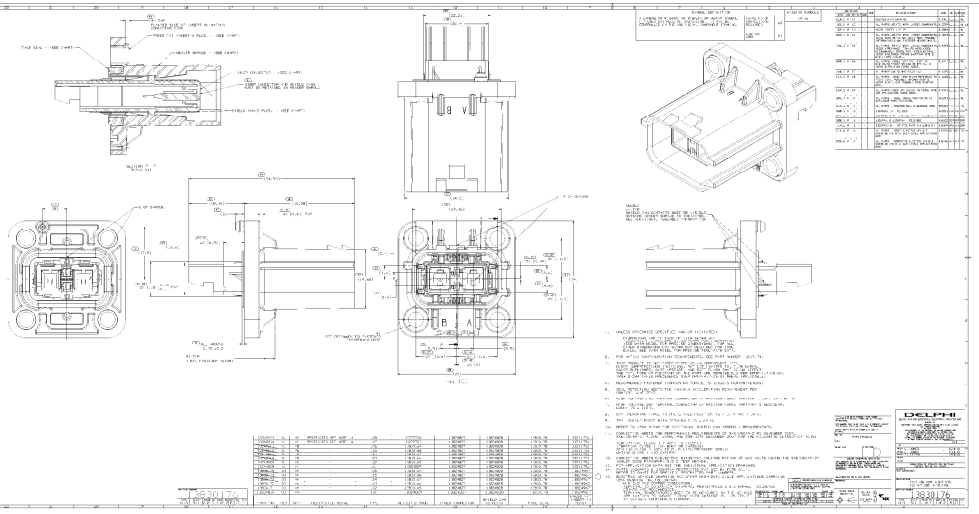


ADDITIONAL ASSEMBLY INFORMATION

REFER TO VPSA PLAN FOR ADDITIONAL SHIELD CAN ASSEMBLY REQUIREMENTS

ASSEMBLE SHIELD CANS TO INNER CONNECTOR IN CORRECT ORIENTATION AS SHOWN BELOW.

PROPERLY ASSEMBLED SHIELD CANS TO INNER CONNECTOR



ITEM	QTY	PART NUMBER	DESCRIPTION	MATERIAL	FINISH
1	1	3830176	HOUSING ASSY		
2	1	3830177	SHIELD CAN		
3	1	3830178	SHIELD CAN		
4	1	3830179	SHIELD CAN		
5	1	3830180	SHIELD CAN		
6	1	3830181	SHIELD CAN		
7	1	3830182	SHIELD CAN		
8	1	3830183	SHIELD CAN		
9	1	3830184	SHIELD CAN		
10	1	3830185	SHIELD CAN		
11	1	3830186	SHIELD CAN		
12	1	3830187	SHIELD CAN		
13	1	3830188	SHIELD CAN		
14	1	3830189	SHIELD CAN		
15	1	3830190	SHIELD CAN		
16	1	3830191	SHIELD CAN		
17	1	3830192	SHIELD CAN		
18	1	3830193	SHIELD CAN		
19	1	3830194	SHIELD CAN		
20	1	3830195	SHIELD CAN		
21	1	3830196	SHIELD CAN		
22	1	3830197	SHIELD CAN		
23	1	3830198	SHIELD CAN		
24	1	3830199	SHIELD CAN		
25	1	3830200	SHIELD CAN		
26	1	3830201	SHIELD CAN		
27	1	3830202	SHIELD CAN		
28	1	3830203	SHIELD CAN		
29	1	3830204	SHIELD CAN		
30	1	3830205	SHIELD CAN		
31	1	3830206	SHIELD CAN		
32	1	3830207	SHIELD CAN		
33	1	3830208	SHIELD CAN		
34	1	3830209	SHIELD CAN		
35	1	3830210	SHIELD CAN		
36	1	3830211	SHIELD CAN		
37	1	3830212	SHIELD CAN		
38	1	3830213	SHIELD CAN		
39	1	3830214	SHIELD CAN		
40	1	3830215	SHIELD CAN		
41	1	3830216	SHIELD CAN		
42	1	3830217	SHIELD CAN		
43	1	3830218	SHIELD CAN		
44	1	3830219	SHIELD CAN		
45	1	3830220	SHIELD CAN		
46	1	3830221	SHIELD CAN		
47	1	3830222	SHIELD CAN		
48	1	3830223	SHIELD CAN		
49	1	3830224	SHIELD CAN		
50	1	3830225	SHIELD CAN		
51	1	3830226	SHIELD CAN		
52	1	3830227	SHIELD CAN		
53	1	3830228	SHIELD CAN		
54	1	3830229	SHIELD CAN		
55	1	3830230	SHIELD CAN		
56	1	3830231	SHIELD CAN		
57	1	3830232	SHIELD CAN		
58	1	3830233	SHIELD CAN		
59	1	3830234	SHIELD CAN		
60	1	3830235	SHIELD CAN		
61	1	3830236	SHIELD CAN		
62	1	3830237	SHIELD CAN		
63	1	3830238	SHIELD CAN		
64	1	3830239	SHIELD CAN		
65	1	3830240	SHIELD CAN		
66	1	3830241	SHIELD CAN		
67	1	3830242	SHIELD CAN		
68	1	3830243	SHIELD CAN		
69	1	3830244	SHIELD CAN		
70	1	3830245	SHIELD CAN		
71	1	3830246	SHIELD CAN		
72	1	3830247	SHIELD CAN		
73	1	3830248	SHIELD CAN		
74	1	3830249	SHIELD CAN		
75	1	3830250	SHIELD CAN		
76	1	3830251	SHIELD CAN		
77	1	3830252	SHIELD CAN		
78	1	3830253	SHIELD CAN		
79	1	3830254	SHIELD CAN		
80	1	3830255	SHIELD CAN		
81	1	3830256	SHIELD CAN		
82	1	3830257	SHIELD CAN		
83	1	3830258	SHIELD CAN		
84	1	3830259	SHIELD CAN		
85	1	3830260	SHIELD CAN		
86	1	3830261	SHIELD CAN		
87	1	3830262	SHIELD CAN		
88	1	3830263	SHIELD CAN		
89	1	3830264	SHIELD CAN		
90	1	3830265	SHIELD CAN		
91	1	3830266	SHIELD CAN		
92	1	3830267	SHIELD CAN		
93	1	3830268	SHIELD CAN		
94	1	3830269	SHIELD CAN		
95	1	3830270	SHIELD CAN		
96	1	3830271	SHIELD CAN		
97	1	3830272	SHIELD CAN		
98	1	3830273	SHIELD CAN		
99	1	3830274	SHIELD CAN		
100	1	3830275	SHIELD CAN		

DELPHI

3830176

07.0636