| SYMBOL DEFINITION | | |
|---|---|---|
| A DIMENSION WITHOUT AN INSPECTION REPORT SYMBOL ( ) DOES NOT REQUIRE INSPECTION. IT MAY BE CONTROLLED ON THE INDIVIDUAL COMPONENT DRAWING. | TOTAL NO OF INSPECTIONS REQUIRED | 8 |
| | LAST NO. USED | 7 |

| MISSING SYMBOLS |
|---|
| NO MISSING SYMBOL NUMBER |

DWG STATUS

| DATE | STG | REV | N/P | CHG | ZONE | REVISION HISTORY | AUTH | DR | APVD 1 | APVD 2 |
|---|---|---|---|---|---|---|---|---|---|---|
| 17JA03 | R | 01 | - | - | | WAS PED96779 AND RELEASED | 235343 | JAA | JAA | RMF |
| 03FE03 | R | 02 | - | - | | MATERIAL WAS MJ571003 PA6 GB20+GF10 HS GRA | 236350 | CJP | CJP | RMF |
| 18FE03 | R | 03 | - | - | | REVISED LOCK RAMP, REMOVED RIB MATERIAL, 11.65 ±0.3 WAS (11.65), PROCESS SENSITIVE DIM WAS 6, VOLUME WAS 0.254 | 236725 | CJP | CJP | RMF |
| 09AU03 | R | 03 | AA | - | | UPDATED PDM ATTRIBUTES | 244194 | FRG | FRG | RMF |
| 03JA17 | R | 03 | AB | - | | ADDED CHART W/INFORMATION TO BE INLINE WITH EU REGION | 435262 | JVM | JVM | SW |

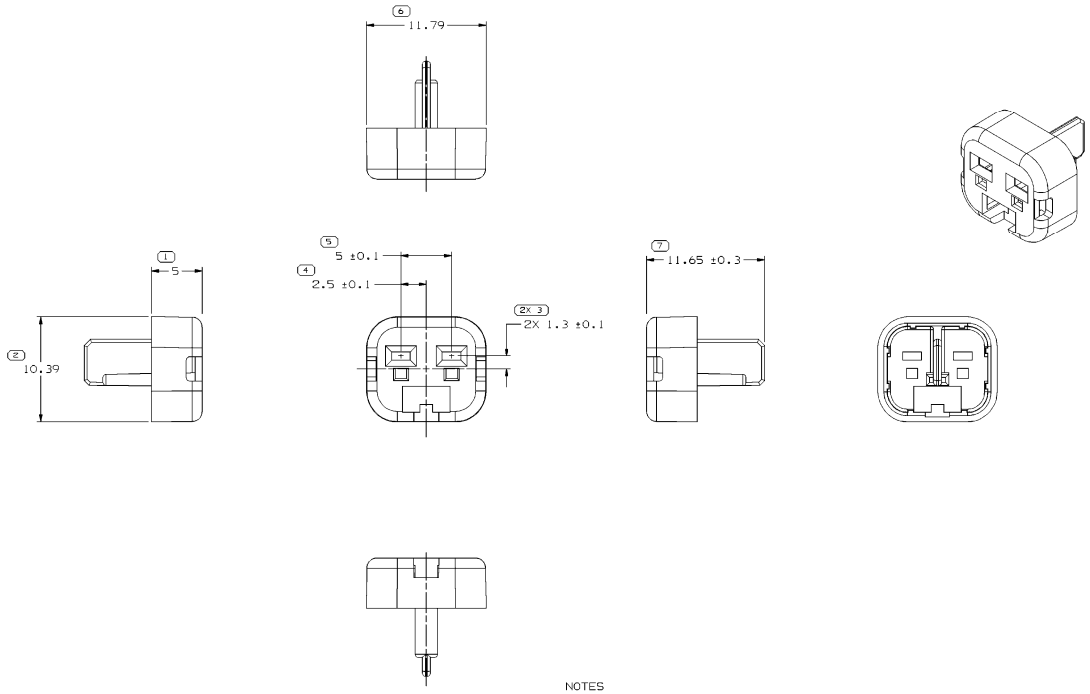


NOTES

1. UNLESS OTHERWISE SPECIFIED AND/OR INDICATED:
   DIMENSIONS ARE TO FACE OF VIEW SHOWN AND AUTOMATICALLY ROUNDED BY COMPUTER FOR INSPECTION (SEE MATH MODEL FOR PRECISE DIMENSIONS). FOR ALL OTHER DIMENSIONS NOT SHOWN BUT REQUIRED FOR TOOL BUILD, SEE MATH MODEL FOR PRECISE TOOL PATH DATA.
2. THIS PART USED IN ASSEMBLY 15419715
3. THIS PART IS NOT CONTROLLED FOR AUTOMATIC FEEDING.
4. MATING COMPONENTS OR EQUIVALENT:
   CONNECTOR 15423275
5. (11)X(0.1) RAISED DELPHI CORPORATE BRAND TO BE LOCATED ON ANY EXTERIOR SURFACE, PREFERABLY VISIBLE AT FINAL ASSEMBLY. OPTIONAL CONSTRUCTION TO BE "PED" OR NO LOGO.
6. THIS PRODUCT IS NOT CATEGORIZED AS AN APPEARANCE ITEM, MINOR IMPERFECTIONS INCLUDING, BUT NOT LIMITED TO, FLOW MARKS, COLOR BLEMISHES, GATE VESTIGE, AND SOFT FLASH THAT DO NOT AFFECT THE FIT, FORM, OR FUNCTION OF THE PART ARE PERMISSIBLE PER DPNP-4.7-CS-01.

| PART-NO.: | CAD-REV | DATE | TOOL-NO. NA: | TOOL-NO. EUROPE: | MATERIAL | SIM. TO RAL NA | SIM. TO RAL EUROPE | MATERIAL-CODE NORTH AMERICA | MATERIAL-CODE EUROPE | INDEX |
|---|---|---|---|---|---|---|---|---|---|---|
| 15423279 | 03 | 06MR03 | 15423279 | 18477A | PBT GF20 | 7035 | 7001 | M4629012 | M1697 | - |

7 PROCESS SENSITIVE DIMENSION

DIMENSIONS ENCLOSED IN ( ) INDICATE REFERENCE DIMENSIONS AND NO TOLERANCE LIMITS ARE ESTABLISHED

| DIMENSIONAL RANGE (MM) | | | | | | | | | | CHART B |
|---|---|---|---|---|---|---|---|---|---|---|
| FROM TO | > 0 20 | > 20 30 | > 30 70 | > 70 100 | >100 150 | >150 200 | >200 250 | >250 300 | >300 400 | |
| TOLERANCE UNLESS OTHERWISE SPECIFIED | | | | | | | | | | |
| | ±0.15 | ±0.2 | ±0.3 | ±0.4 | ±0.5 | ±0.6 | ±0.8 | ±1 | ±1.2 | |
| ANGULAR TOLERANCE ±2° | | | | | | | | | | |

A LINE DRAWN THROUGH A PART NUMBER INDICATES THAT PHYSICAL PARTS ARE NOT AVAILABLE FOR ORDERING.

PART NUMBERS THAT DO NOT HAVE A LINE PRESENT INDICATE THAT PHYSICAL PARTS ARE AVAILABLE FOR ORDERING.

CONTACT DELPHI SALES TO ASSURE AVAILABILITY OF PARTS.

DWG TYPE: PART DRAWING

STYLE

VOLUME (CU^3): 0.249

DISTR CODE

UNLESS OTHERWISE SPECIFIED

THIS DOCUMENT IS IN ACCORDANCE WITH ASME Y14.5M-1994 AS AMENDED BY ASME Y14.5M-1994 ADDENDUM #1 (TOLERANCING ADDENDUM - 1997). ALL GEOMETRIC TOLERANCES AND RELATED DATUMS APPLY RFS. RULE #1(PERFECT FORM AT MMC) DOES NOT APPLY WHEN RELATIONSHIP BETWEEN FEATURES IS ESTABLISHED BY ORIENTATION OR LOCATION TOLERANCES. SEPARATE POSITION CALLOUTS MAY BE SHARED SEPARATELY, REGARDLESS OF DATUM REFERENCE.
ALL DIMENSIONS ARE IN MILLIMETERS

REFERENCE

THIRD ANGLE PROJECTION

DO NOT SCALE
USE MATH DATA

CAD NX

DELPHI

DELPHI PACKARD ELECTRICAL/ELECTRONIC ARCHITECTURE
KRAKOW, POLAND

COPYRIGHT 2003 DELPHI CORPORATION AND/OR ITS AFFILIATES.
ALL RIGHTS RESERVED.
REVISED 2007
THIS DRAWING IS THE PROPERTY OF DELPHI CORPORATION AND CONTAINS DELPHI CONFIDENTIAL INFORMATION. THE REPRODUCTION, DISTRIBUTION AND UTILIZATION OF THIS DOCUMENT OR ITS RELATED CAD MATH DATA, AS WELL AS COMMUNICATION OF ANY CONTENT TO OTHERS, WITHOUT EXPRESS AUTHORIZATION, IS PROHIBITED.

| | | DATE |
|---|---|---|
| DR | | |
| APVD1 | J.S. ALVARADO | 21JA03 |
| APVD2 | J.S. ALVARADO | 21JA03 |
| APVD3 | R.M. FETCENKO | 24JA03 |
| APVD4 | | |
| APVD5 | | |

SUBSTANCES OF CONCERN AND RECYCLED CONTENT PER DELPHI [0949001]

MATERIAL: POLYESTER COMPOUND GRAY LT

DRAWING NAME: LOCK RETAINER CONN

DRAWING NUMBER: 15423279

| SIZE | SCALE | FRAME NO | SHEET NO | STG | REV | N/P |
|---|---|---|---|---|---|---|
| A1 | 5:1 | 1 OF 1 | 1 OF 1 | R | 03 | AB |

Part: 15423279
Dwg: 15423279-A-CS01-1-R03 Date: 03-Jun-11 Time: 09:24
Machine: