SYMBOL DEFINITION		
A DIMENSION WITHOUT AN INSPECTION REPORT SYMBOL ( ) DOES NOT REQUIRE INSPECTION. IT MAY BE CONTROLLED ON THE INDIVIDUAL COMPONENT DRAWING.	TOTAL NO OF INSPECTIONS REQUIRED	9
	LAST NO. USED	14

MISSING SYMBOLS: 5-9

DWG STATUS DATE	STG	REV	N/P	CHG	ZONE	REVISION HISTORY	AUTH	DR	APVD 1	APVD 2
10DE02	R	01	-	-		WAS PE068949 AND RELEASED	234532	EES	EES	EJH
06AU03	R	02	-	-		15476168 WAS PE068952 AND RELEASED; UPDATED PDM ATTRIBUTES	243974	ADK	ADK	EJH
15DE03	R	03	-	-		ALL PARTS - REMOVED ASM DIMS (2 PLCS). UPDATED PDM ATTRIBUTES 15476168 - REVISED GRAPHICS	249883	EES	EES	EJH
21JN04	R	04	-	-		ALL PARTS - ADDED NOTE #5	256228	EES	EES	GR
12JA05	R	05	-	-		13519885 - RELEASED	263105	CCV	JVM	GR
10MY05	R	06	-	-		13519885 - INACTIVE	267888	GLG	JVM	GR
12AP10	R	07	-	-		ALL ACTIVE PARTS - UPDATED PDM ATTRIBUTES	410478	JRL	JRL	MAC
24OC11	R	08	-	-		15455571 & 15476168 - ADDED TARNISH NOTE	415860	MAL	MAL	OAF
06JA12	R	09	-	-		ALL PARTS - DIM 10 WAS 7.42 ± 0.08 AND UPDATED MAT'L CALLOUT	416635	MAB	MAB	RAP
03AU12	R	10	-	-		ALL PARTS - ADDED "PREFERRED MAT'L SIZE" COLUMN	419113	AHY	JVM	OAF
30MY13	R	11	-	-		13519885 - SIZE MM² WAS 0.8-1 AND CABLE DIA WAS 2.3 -1.7	422691	CAR	JVM	YVH
01AU13	R	12	-	-		13519885 - REVSION 02AB WAS 03 AUTH NUMBER 422691;13519885 - SIZE MM² WAS 0.8-1 AND CABLE DIA WAS 2.3 -1.7	423439	YVH	YVH	CDL
04NO13	R	13	-	-		13519885 - CABLE ID WAS 17	424486	YVH	YVH	CDL
17FE14	R	14	-	-		13519885 - UPDATED PART AVAILABILITY	425566	YVH	YVH	CDL

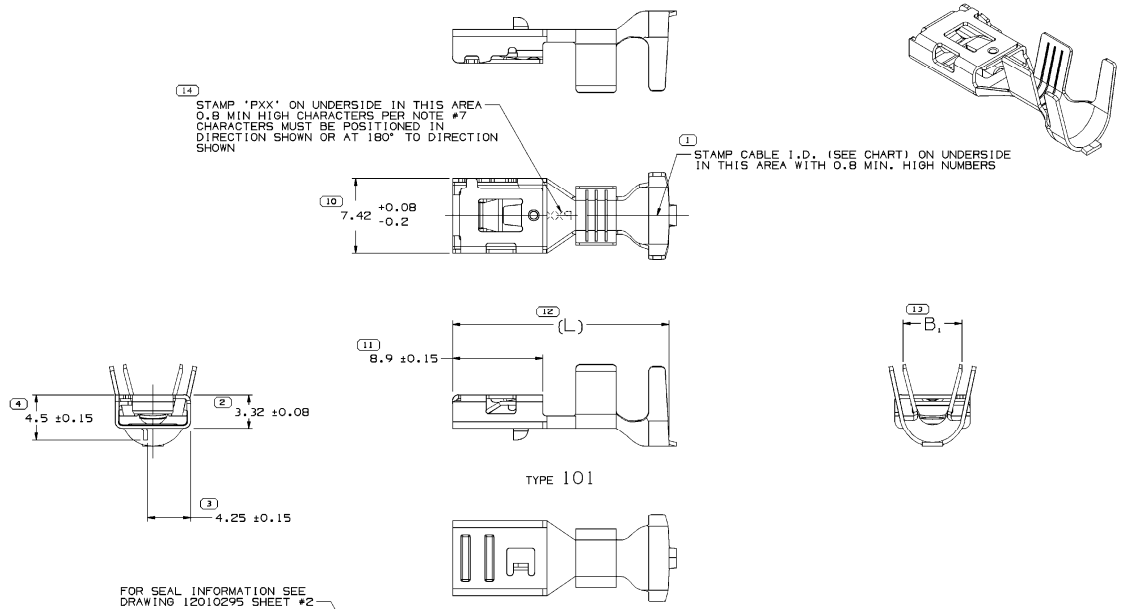

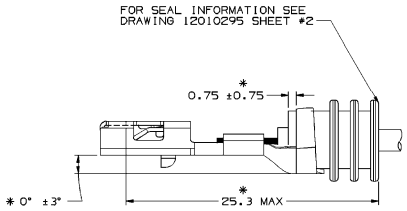

TERMINAL, SEAL AND CABLE ALIGNMENT VIEW

NOTES

1. * DENOTES DIMENSIONS MADE AT CUT-OFF AND CRIMP DIE.
2. RECOMMENDED MATING BLADE: WIDTH 6.4/6.2, THICKNESS 0.83/0.77 & LENGTH 8.4/8.6.
3. MATING TERMINAL TBD OR EQUIVALENT
4. UNLESS OTHERWISE SPECIFIED AND/OR INDICATED:

   DIMENSIONS ARE TO FACE OF VIEW SHOWN AND AUTOMATICALLY ROUNDED BY COMPUTER FOR INSPECTION (SEE MATH MODEL FOR PRECISE DIMENSIONS). FOR ALL OTHER DIMENSIONS NOT SHOWN BUT REQUIRED FOR TOOL BUILD, SEE MATH MODEL FOR PRECISE TOOL PATH DATA.
5. PACKAGING REQUIREMENTS:
   A. TERMINALS ON REELS TO USE SILVER SAVER NT TARNISH PAPER INTERLEAF.
   B. TERMINALS ON REELS TO BE PACKAGED IN PASSIVATED CARDBORD BOXES.
6. DO NOT PROBE, TEST OR OTHERWISE CONTACT THE INTERIOR REGION (THE SPRING OR ANY MOVING PART) OF THIS TERMINAL. SEVERE DAMAGE CAN OCCUR, COMPROMISING THE PERFORMANCE OF THE ELECTRICAL INTERFACE.
7. "PXX" INDICATES "P" PLUS LAST TWO DIGITS OF MAKE DIE SERIES NUMBER (P01, P02, P03, ETC).
8. TARNISH CAN BE DEVELOP IF TERMINALS ARE EXPOSED TO THE ENVIRONMENT. TARNISH WILL NOT AFFECT FIT/FUNCTION OF THE PART.

PART NO	REV	N/P	PREFERRED MAT'L SIZE	ALTERNATIVE MAT'L SIZE	MAT'L SPEC	SIZE (MM²)	ID	DIA	TYPE	(L)	B1±0.2
13519885	02	AE	0.38 X 29.09	0.38 X 29.76	AG PLATED COPPER ALLOY	0.8 - 1	18	2.3 - 1.7	101	21.35	3.1
15476168	02	AA	0.38 X 29.09	0.38 X 29.76	AG PLATED COPPER ALLOY	4 - 6	10	4.3 - 3.4	101	21.35	5.8
15455571	02	AA	0.38 X 29.09	0.38 X 29.76	AG PLATED COPPER ALLOY	2 - 3	13	3.2 - 2.5	101	21.35	4.2

PLATED | CABLE

(10) PROCESS SENSITIVE DIMENSION

DIMENSIONS ENCLOSED IN ( ) INDICATE REFERENCE DIMENSIONS AND NO TOLERANCE LIMITS ARE ESTABLISHED

DIMENSIONAL RANGE (MM)		CHART D
FROM	0	>12
TO	12	
TOLERANCE UNLESS OTHERWISE SPECIFIED	±0.1	±0.2
ANGULAR TOLERANCE ±2°		

A LINE DRAWN THROUGH A PART NUMBER INDICATES THAT PHYSICAL PARTS ARE NOT AVAILABLE FOR ORDERING.

PART NUMBERS THAT DO NOT HAVE A LINE PRESENT INDICATE THAT PHYSICAL PARTS ARE AVAILABLE FOR ORDERING.

CONTACT DELPHI SALES TO ASSURE AVAILABILITY OF PARTS.

DWG TYPE: PART DRAWING

STYLE

VOLUME (CM³)

DISTR CODE

UNLESS OTHERWISE SPECIFIED

THIS DOCUMENT IS IN ACCORDANCE WITH ASME Y14.5M-1994 AS AMENDED BY ASME Y14.5M-1994 ERRATA AND ASME Y14.5M TOLERANCING ADDENDUM-2001. SEPARTE PATTERNS OF FEATURES MAY BE BASED SEPARATELY REGARDLESS OF DATUM REFERENCES.

ALL DIMENSIONS ARE IN MILLIMETERS

REFERENCE

THIRD ANGLE PROJECTION

DO NOT SCALE

USE MATH DATA

NX

DELPHI

DELPHI PACKARD ELECTRICAL/ELECTRONIC ARCHITECTURE
WARREN, OH

COPYRIGHT 2002 DELPHI CORPORATION AND/OR ITS AFFILIATES.
ALL RIGHTS RESERVED.
REVISED 2004
THIS DRAWING IS THE PROPERTY OF DELPHI CORPORATION AND CONTAINS DELPHI CONFIDENTIAL INFORMATION. THE REPRODUCTION, DISTRIBUTION AND UTILIZATION OF THIS DOCUMENT OR ITS RELATED CAD MATH DATA, AS WELL AS COMMUNICATION OF ANY CONTENT TO OTHERS, WITHOUT EXPRESS AUTHORIZATION, IS PROHIBITED.

DR		DATE
APVD1	E. SEIDEL	10DE02
APVD2	E. SEIDEL	10DE02
APVD3	E. HAROLDSON	11DE02
APVD4		
APVD5		

SUBSTANCES OF CONCERN AND RECYCLED CONTENT PER DELPHI [0949001]

MATERIAL: SEE CHART

DRAWING NAME: TAXI TERM F GT 630 SEALED

DRAWING NUMBER: 15455570

SIZE	SCALE	FRAME NO	SHEET NO	STG	REV	N/P
A1	5:1	1 OF 1	1 OF 1	R	14	-