THIS DRAWING AND DESIGN HEREON CONSTITUTES A PROPRIETARY DESIGN OF PACKARD ELECTRIC DIVISION AND IS NOT TO BE DUPLICATED OR REPRODUCED WITHOUT AUTHORITY OF PACKARD ELECTRIC DIVISION.

DO NOT SCALE

PACKARD ELECTRIC DIVISION
GENERAL MOTORS CORPORATION
WARREN, OHIO

PART NO. 1211 0403

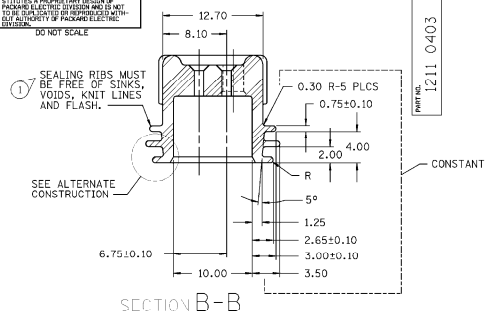

SECTION B-B

ALTERNATE CONSTRUCTION

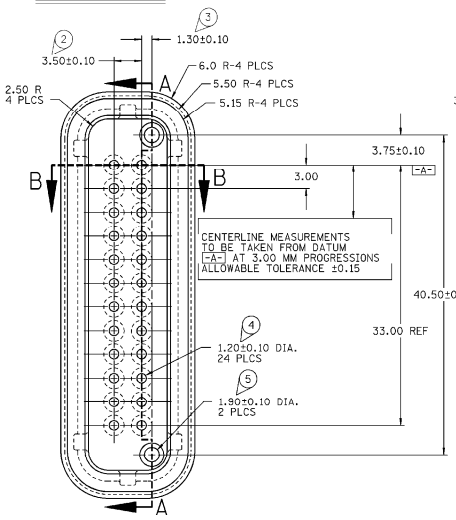

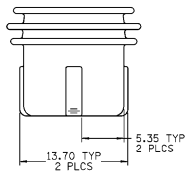

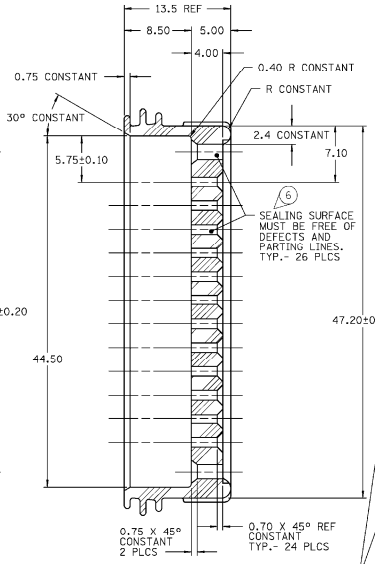

SECTION A-A

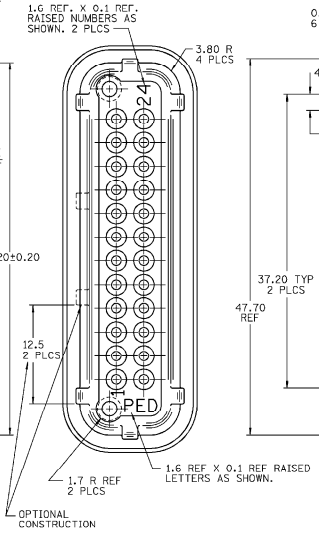

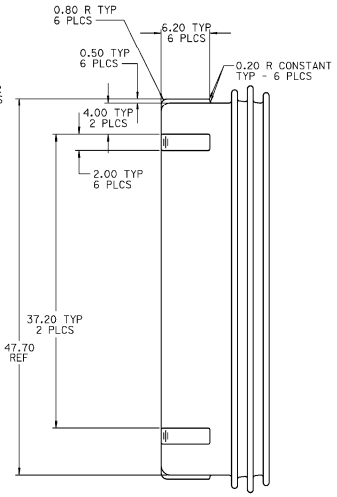

NOTES —
1. SEALING RIBS ARE IDENTICAL, EXCEPT AS SHOWN.
2. PARTS MUST BE DEFLASHED, WASHED AND DRIED AFTER MOLDING.
3. PARTS TO BE PACKED IN PLASTIC BAGS.
4. SEAL TO BE USED IN CONJUCTION WITH STRAIN RELIEF 12110155, OR EQUIVALENT.
5. THIS PART ALSO USED WITH RETAINER 12129183, CONNECTOR 12129225, TERMINAL 12084912, C.P.A. 12110299, CAVITY PLUG(S) 12129557 AND WHEN FULLY ASSEMBLED MATES TO HEADER CONNECTOR ASSEMBLY 12092320 OR EQUIVALENTS.
6. (B2) ENVIRONMENTAL SEAL CLASS CODE 3.
7. THIS PART IS NOT CONTROLLED FOR AUTOMATIC FEEDING.
8. SEAL TO ACCEPT CABLE O.D. BETWEEN 1.67 MM MIN. TO 2.12 MM MAX. AND 0.8MM² OF CABLE PM3101.
9. SEALING HOLES ARE IDENTICAL, EXCEPT AS SHOWN.
10. "⬡" DENOTES DIMENSIONS AND CHARACTERISTICS THAT ARE IMPORTANT TO THE FUNCTION AND/OR PROCESSING OF THE PART. IT DOES NOT NECESSARILY INDICATE AN SPC DIMENSION. THIS DRAWING HAS 7 SNOWCONES.

DATE	SYM	REVISION RECORD	AUTHORITY	DR	CK
16JUN90	A	RELEASED	90006	CJV	CJV
24MAY91	B	1.20±0.10 DIA. WAS 2.20±0.10 DIA.,			
		1.20±0.10 DIA. WAS 1.40±0.10 DIA.,			
		0.75 X 45° CONSTANT WAS 0.20 X 45°			
		CONSTANT, 0.70 X 45° REF CONSTANT			
		WAS 0.50 X 45° REF CONSTANT	140308	SG	SC
22AUG1	B1	REVISED NOTE #7	143721	JK	RAH
08SEP93	B2	REVISED NOTES AND PART NAME	157147	TEB	TEB

THE FOLLOWING ITEMS APPLY UNLESS OTHERWISE SPECIFIED:

FOR FEATURES-OF-SIZE, "PERFECT" STRAIGHTNESS NOT REQUIRED AT MMC. FOR GEOMETRIC REF. RES. HARDNESS MUST BE WITHIN THE MMC AND LMC (LAST MATERIAL CONDITION) BOUNDARY. TRUE POSITION TOLERANCES, AND RELATED DATUMS (EXCEPT PLANE SURFACES), APPLY AT MMC. OTHER GEOMETRIC TOLERANCES, AND RELATED DATUMS, APPLY RFS. SPHERICAL TRUE POSITION TOLERANCE MAY BE TRANSFORMED TO CYLINDRICAL TOLERANCE BY RULE #4.

GEOMETRIC DRAWING SYMBOLS:

FLAT — STRAIGHT — SQUARE — PARALLEL — MATERIAL CONDITION (MMC) — REGARDLESS OF FEATURE SIZE (RFS) — DIAMETER — R-MOUNT — TRUE POSITION — PROFILE OF A LINE — ANGULAR — CYLINDRICAL — CONCENTRIC — SYMMETRICAL — PROFILE OF A LINE — PROJECTED TOL. ZONE — BASIC DIMENSION

INTERGRAPH	FILE SPEC:	####USER#### DGN#SPECIFICATION############ ####CYTIME######	
THIRD ANGLE PROJECTION	METRIC DIMENSIONS ARE IN MILLIMETERS UNLESS OTHERWISE SPECIFIED.		
CODE NO. 6901	TOLERANCE UNLESS OTHERWISE SPECIFIED DECIMAL: ONE PLACE ± 0.3 TWO PLACE ± 0.5	ANGULAR ± °	
G.C. -R-4066			
DWG. DATE 16AUG90	SCALE 4:1	DR. T. VANDUZER	16AUG90
EST. NO.		CK. T. VANDUZER	DATE 14MAY91
REFERENCE NO. 12092314		APPR. CARLOS SERGIN	DATE 30JUN00
		APPR. G. J. PULEFONKI	DATE 30JUN00
MATERIAL SPEC. PM002260-001 SILICONE - GREEN			
NAME SEAL 24F MIC/P 100W			
PART NO. 1211 0403		SIZE D	

PACKARD ELECTRIC

4174A(2)