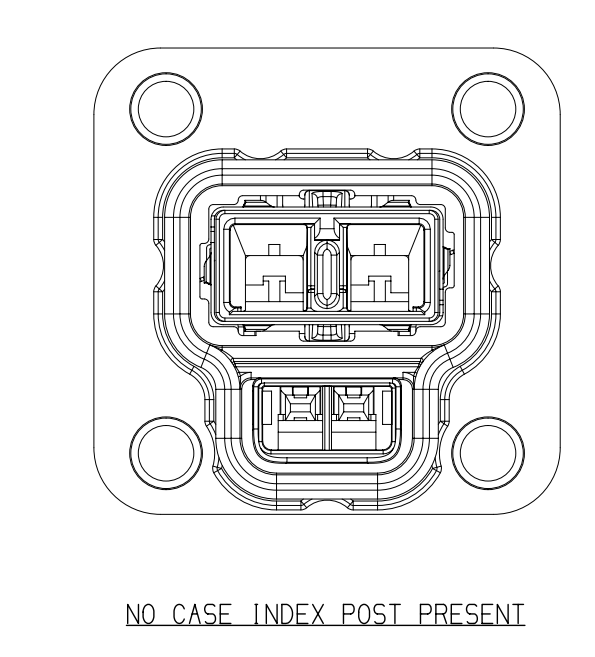
NO CASE INDEX POST PRESENT

BACK VIEW

TYPE 104
SAME AS TYPE 102
EXCEPT AS SHOWN

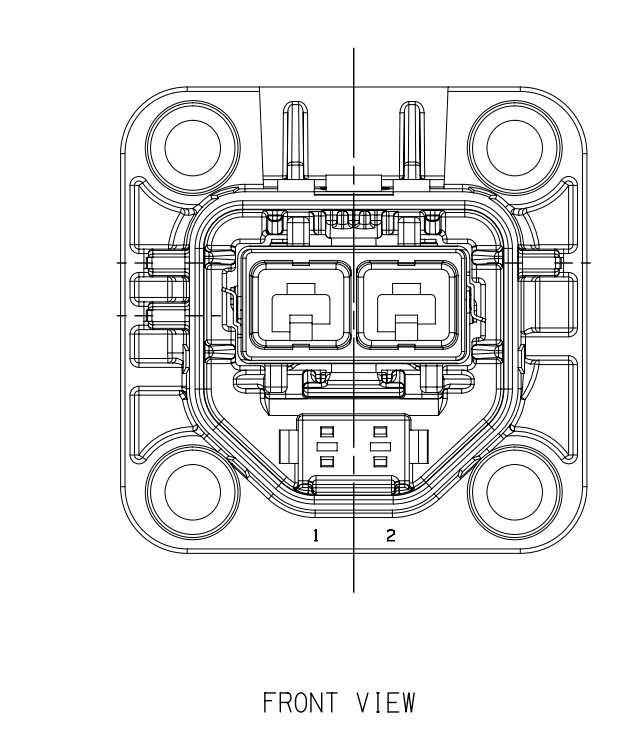

FRONT VIEW

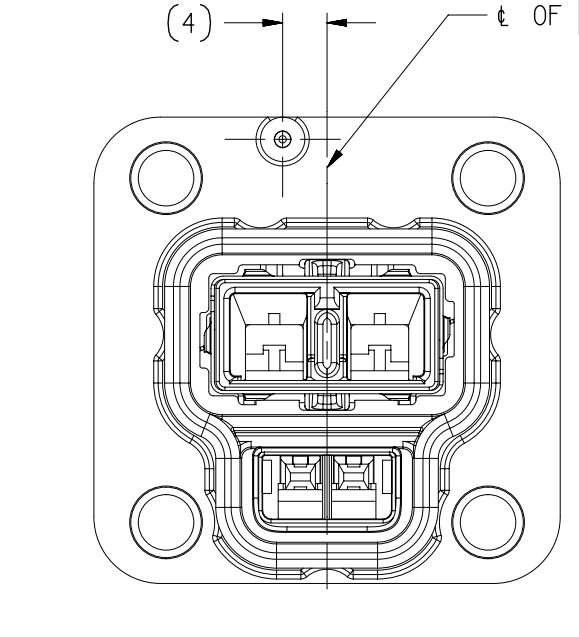

BACK VIEW

TYPE 103
SAME AS TYPE 101
EXCEPT AS SHOWN

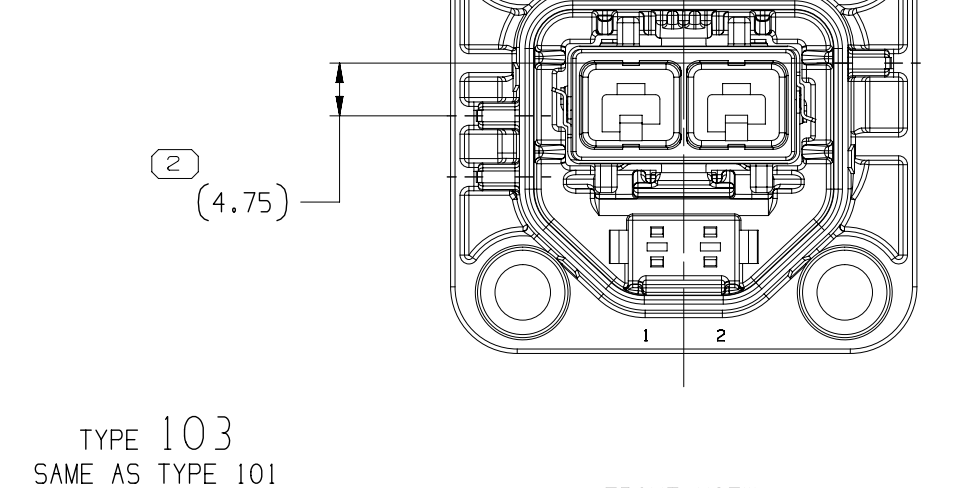

FRONT VIEW

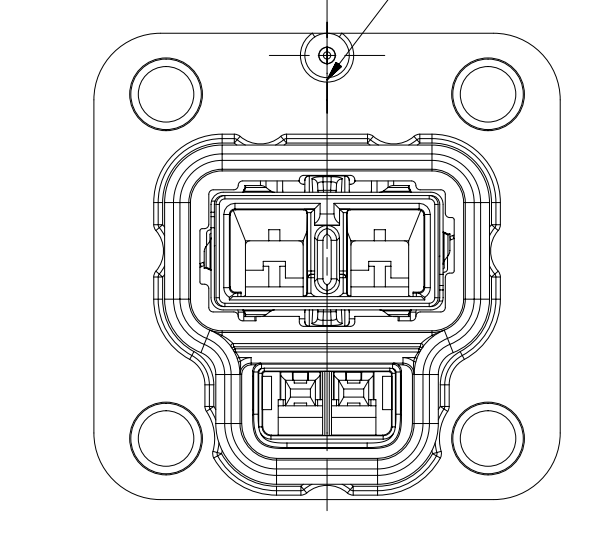

BACK VIEW

TYPE 102
SAME AS TYPE 101
EXCEPT AS SHOWN

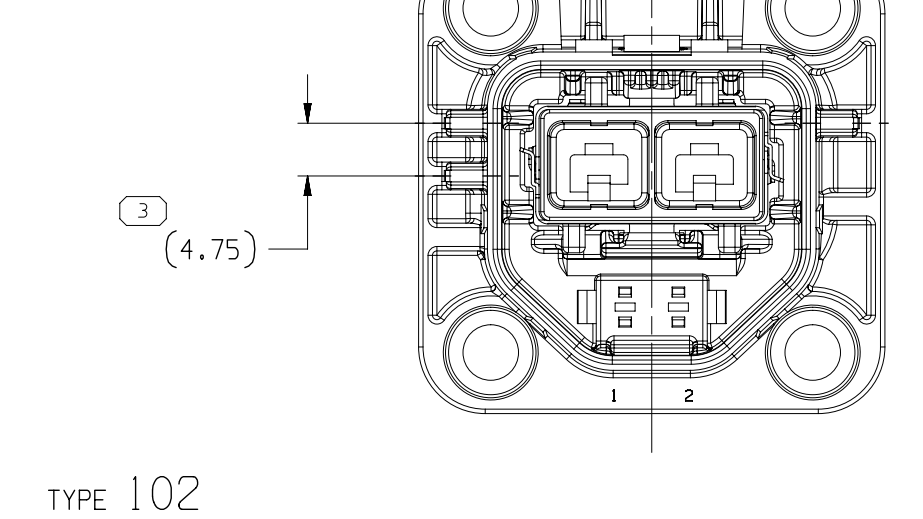

FRONT VIEW

ADDITIONAL ASSEMBLY INFORMATION

ASSEMBLE SHIELD CANS TO INNER
CONNECTOR IN CORRECT ORIENTATION
AS SHOWN BELOW.

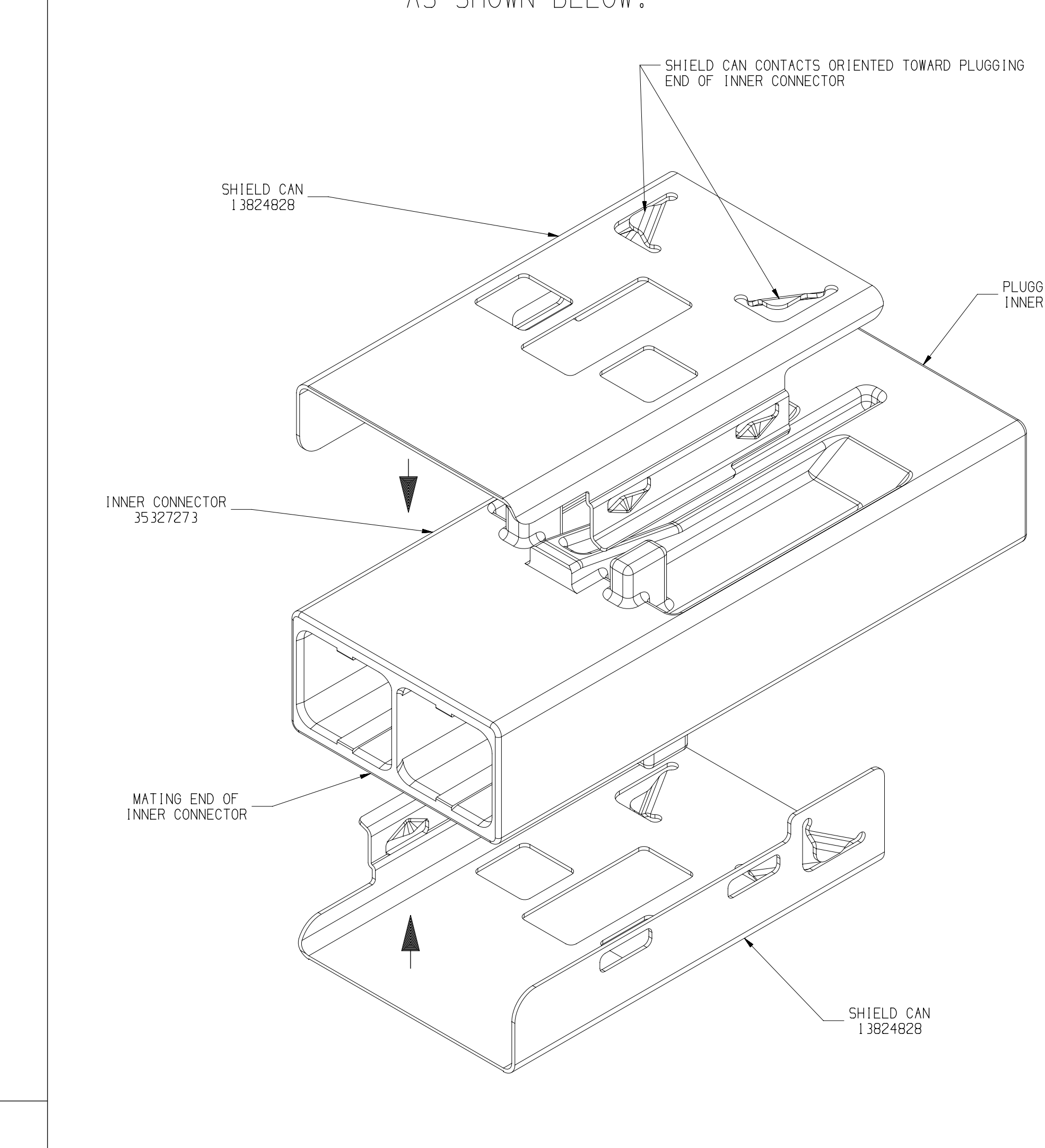
SHIELD CAN CONTACTS ORIENTED TOWARD PLUGGING END OF INNER CONNECTOR
SHIELD CAN 13824828
PLUGGING END OF INNER CONNECTOR
INNER CONNECTOR 35327273
MATING END OF INNER CONNECTOR
SHIELD CAN 13824828

PROPERLY ASSEMBLED SHIELD CANS
TO INNER CONNECTOR

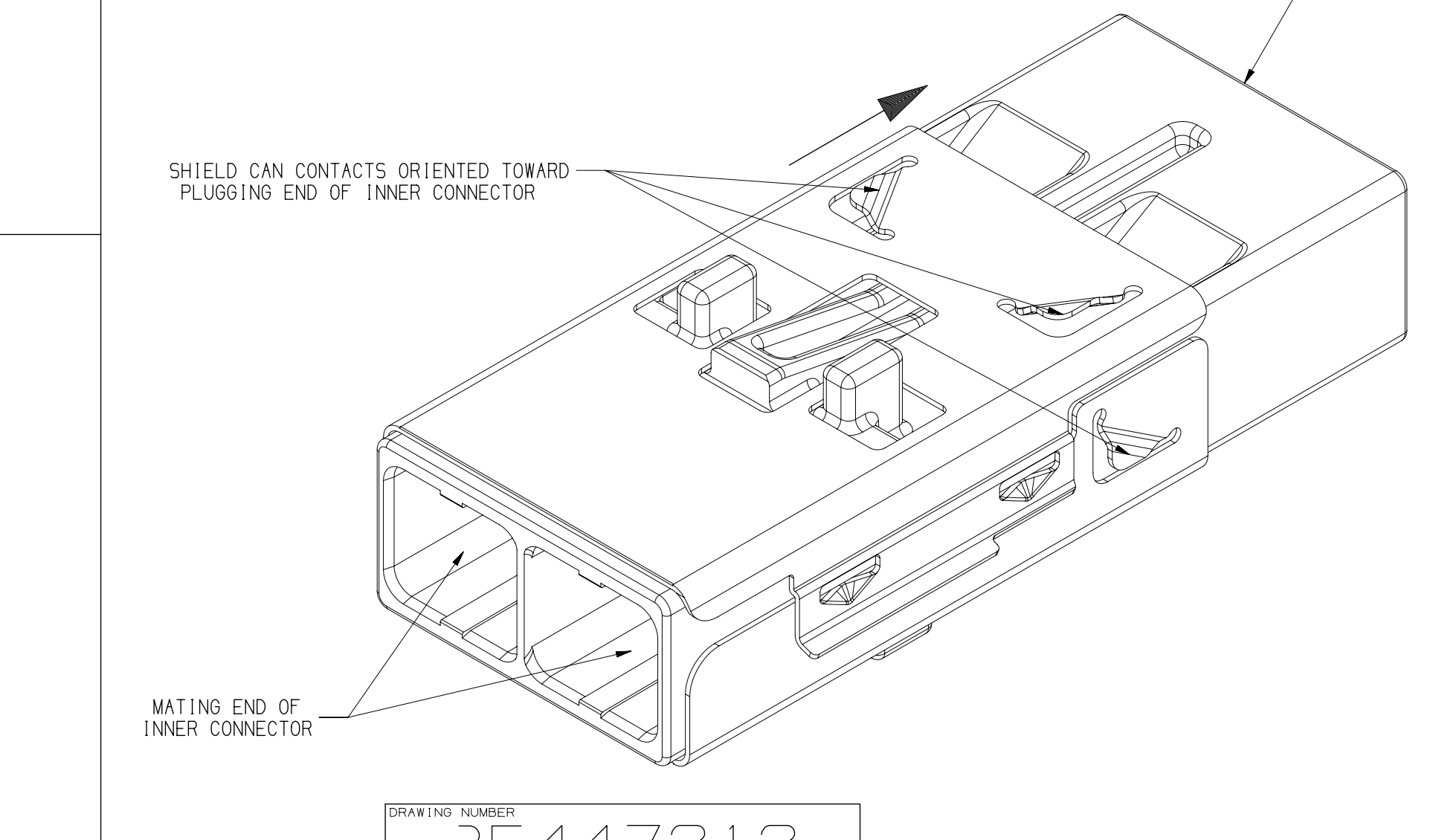
PLUGGING END OF INNER CONNECTOR
SHIELD CAN CONTACTS ORIENTED TOWARD PLUGGING END OF INNER CONNECTOR
MATING END OF INNER CONNECTOR

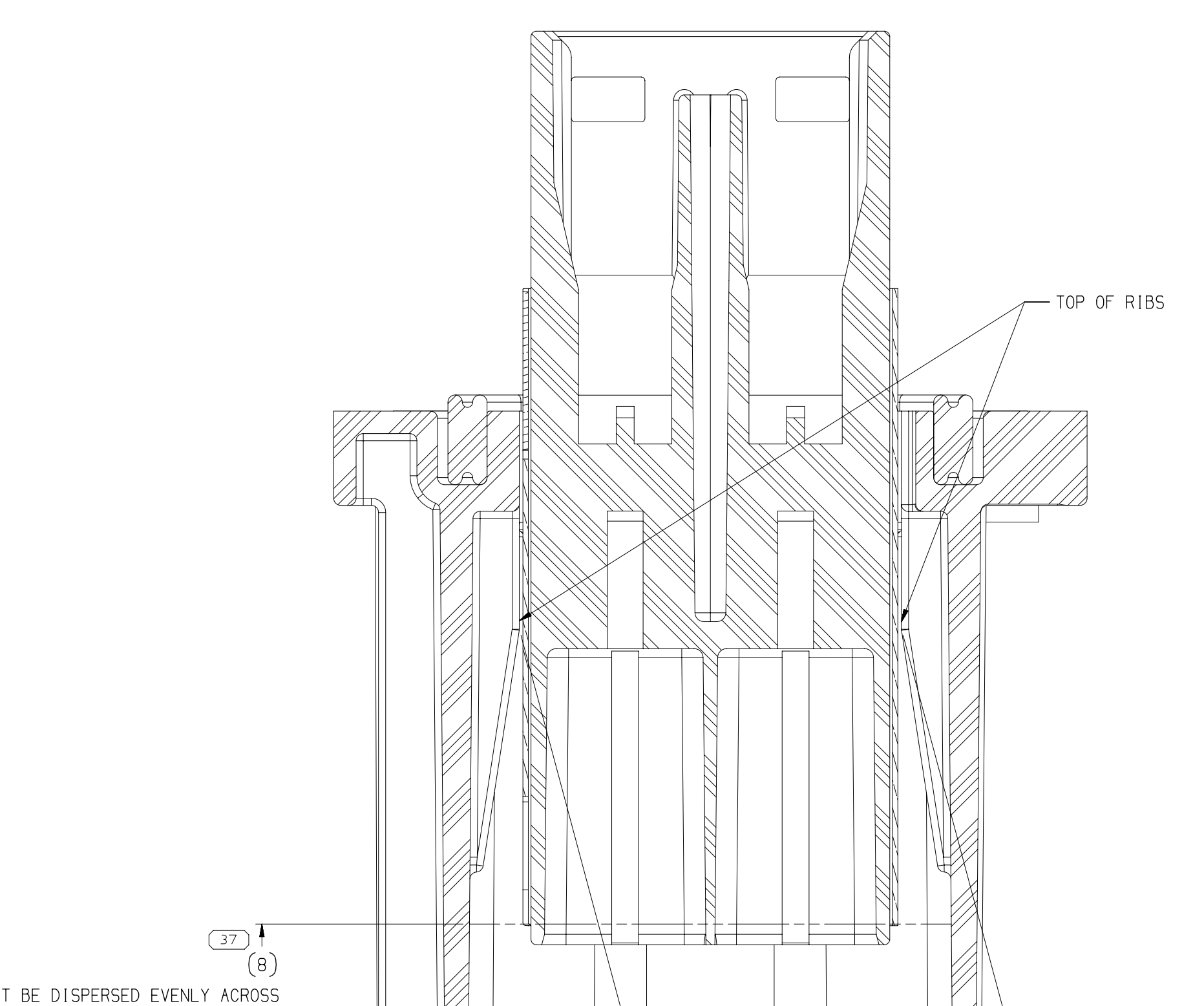
TOP OF RIBS
37
(8)
M6504001 MUST BE DISPERSED EVENLY ACROSS THE ENTIRE INSIDE SURFACE OF THE SHROUD TO THE SPECIFIED DEPTH SHOWN.
15
(21.3)
SECTION B-B

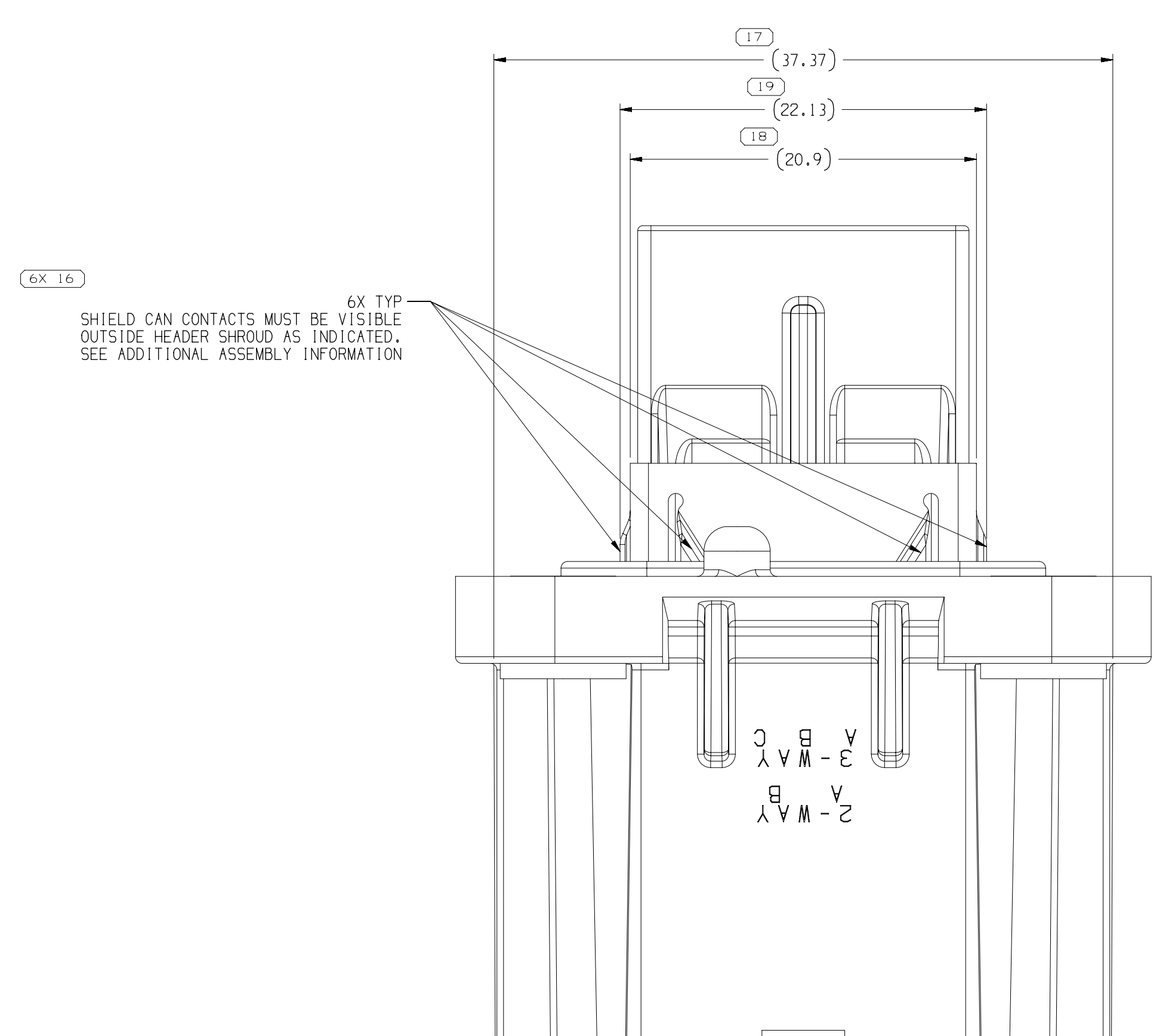
17
(37.37)
19
(22.13)
18
(20.9)
6X 16
6X TYP
SHIELD CAN CONTACTS MUST BE VISIBLE OUTSIDE HEADER SHROUD AS INDICATED. SEE ADDITIONAL ASSEMBLY INFORMATION
3-WAY A B C
2-WAY A B

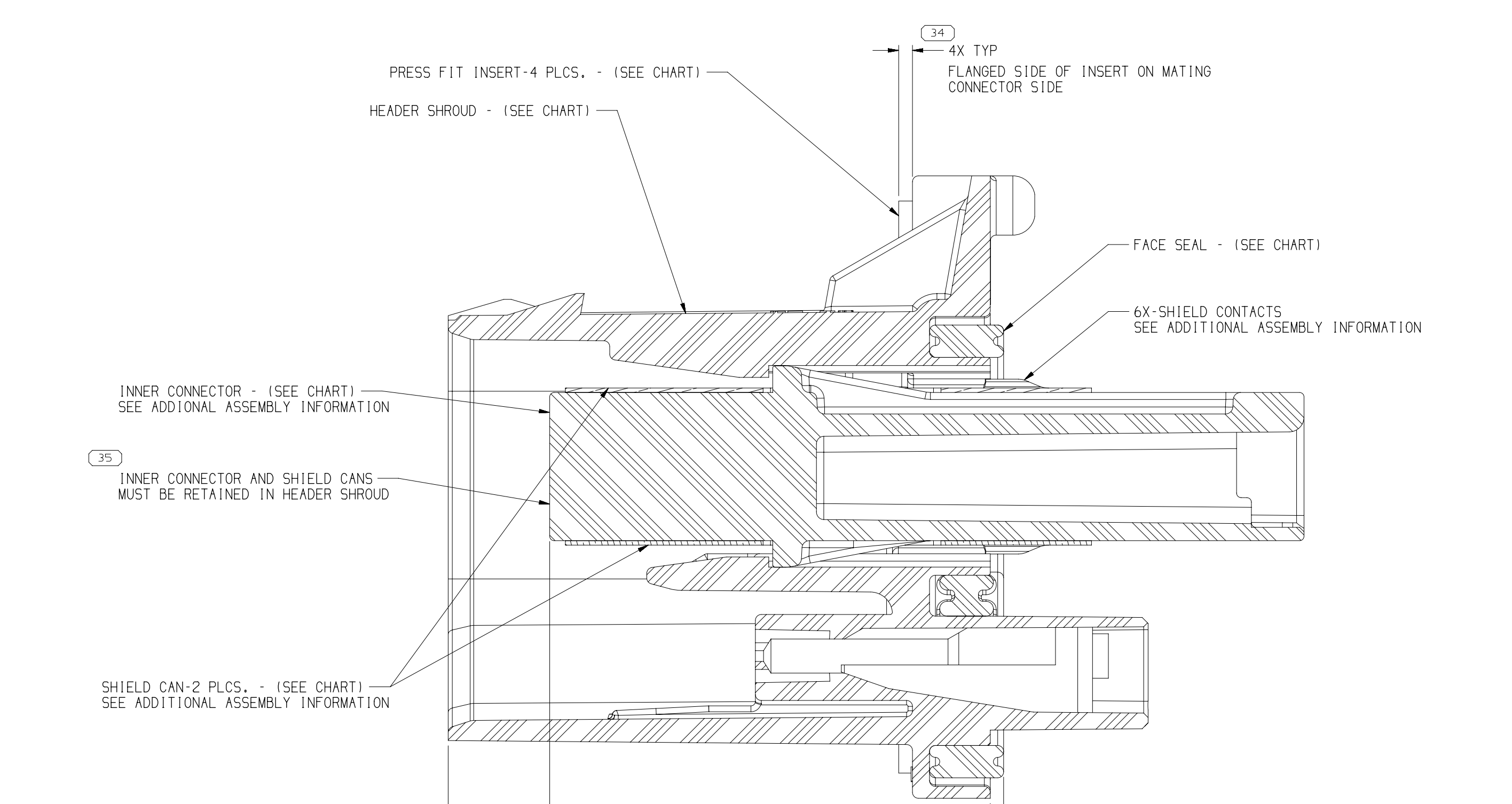
PRESS FIT INSERT-4 PLCS. - (SEE CHART)
HEADER SHROUD - (SEE CHART)
34
4X TYP
FLANGED SIDE OF INSERT ON MATING CONNECTOR SIDE
FACE SEAL - (SEE CHART)
6X-SHIELD CONTACTS SEE ADDITIONAL ASSEMBLY INFORMATION
INNER CONNECTOR - (SEE CHART) SEE ADDIONAL ASSEMBLY INFORMATION
35
INNER CONNECTOR AND SHIELD CANS MUST BE RETAINED IN HEADER SHROUD
SHIELD CAN-2 PLCS. - (SEE CHART) SEE ADDITIONAL ASSEMBLY INFORMATION
38
6.85 +0.55 -0.82
36
(0.9)
SECTION A-A

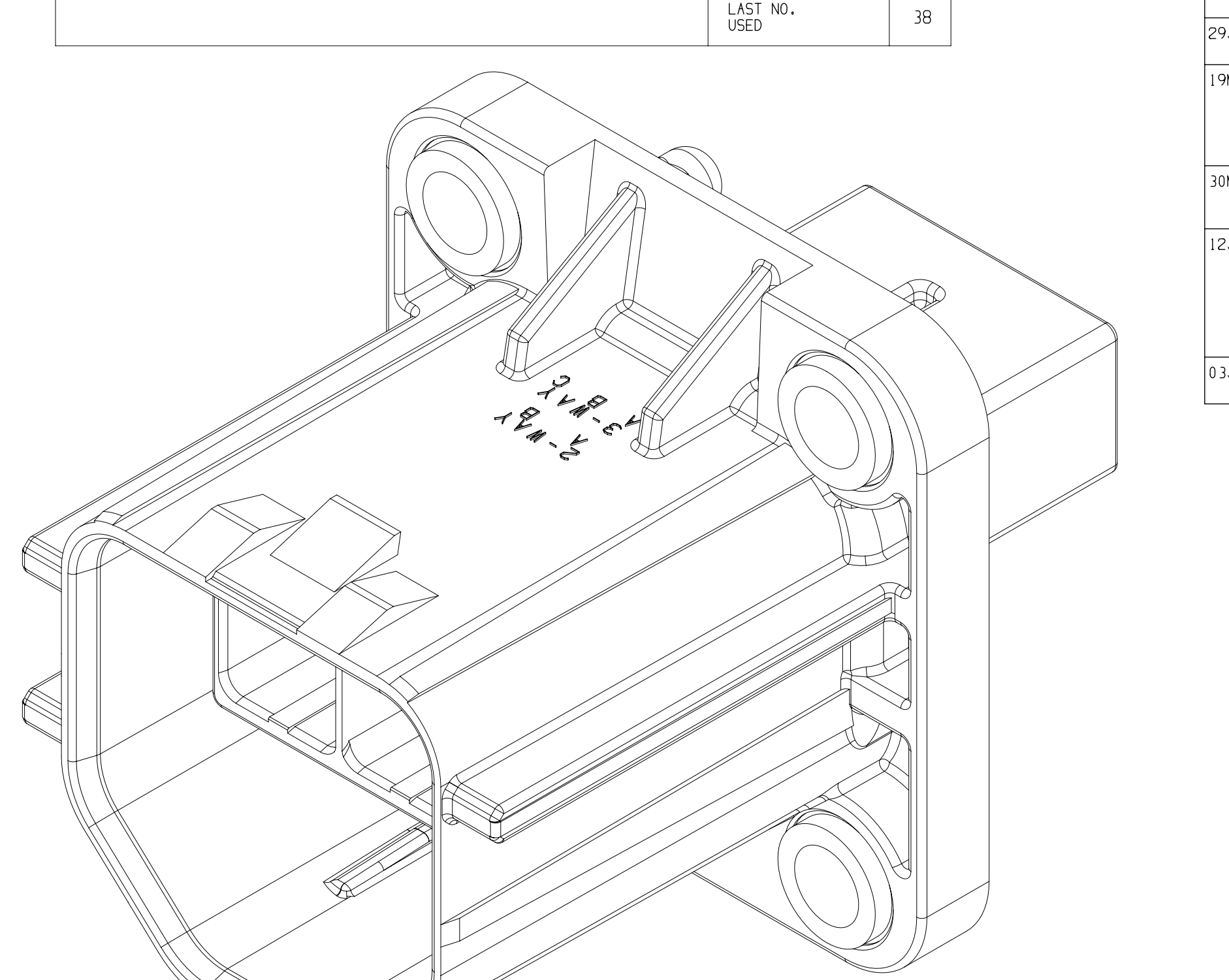
3-WAY A B C
2-WAY A B

SYMBOL DEFINITION		
A DIMENSION WITHOUT AN INSPECTION REPORT SYMBOL ⬭ DOES NOT REQUIRE INSPECTION. IT MAY BE CONTROLLED ON THE INDIVIDUAL COMPONENT DRAWING.	TOTAL NO OF INSPECTIONS REQUIRED	49
	LAST NO. USED	38

MISSING SYMBOLS
23 29

DWG STATUS DATE	STG	REV	N/P	CHG	ZONE	REVISION HISTORY	AUTH	DR	APVD 1	APVD 2
19FE20	R	01	-	-		RELEASED ALL PARTS	551046	TAI	TAI	MN
20JL21	R	02	-	-		ALL PARTS: UPDATED PDM ATTRIBUTES, ADDED DIM 38 35560545: RELEASED TYPE 104	554192	ES	ES	JPC
29JL21	R	03	-	-		ALL PARTS - UPDATED PART AVAILABILITY (PN WAS NOT AVAILABLE)	554890	JLL	JAA	JPC
19MY22	R	04	-	-		ALL PARTS - 2.5+0.05/-0.15 WAS 2.5±0.05, 37.37 0/-0.4 WAS 37.37±0.1 AND 2X 0.73 +0.1/0 ⊕ 0.15Ⓜ A B-C D WAS 2X 0.73 ±0.03 ⊕ 0.1Ⓜ A B-C D	557473	EZJ	CGD	JPC
30MY22	R	05	-	-		ALL PARTS - GD&T POSITION CONTROL WAS 0.15 ON DIM #23 AND UPDATED "HEADER SHROUD" TO THE LATEST REV	557587	GLG	CGD	JPC
12JL22	R	06	-	-		ALL PARTS - REMOVED DIMS (2 PLCS), DATUMS (4 PLCS), BASIC DIMS (4 PLCS), DATUM CL LABEL (3 PLCS) & FCF ON DIM #11, (2.5) WAS 2.5±0.05, (2.5) WAS 2.5 +0.05/-0.15 AND (37.37) WAS 37.37+0/-0.4; 35447175, 35447187 & 35560545 - UPDATED PART AVAILABILITY	558034	ESC	ESC	JPC
03JA23	R	07	-	-		35447175 & 35447187 - UPDATED PART AVAILABILITY	559300	AGC	AGC	JPC

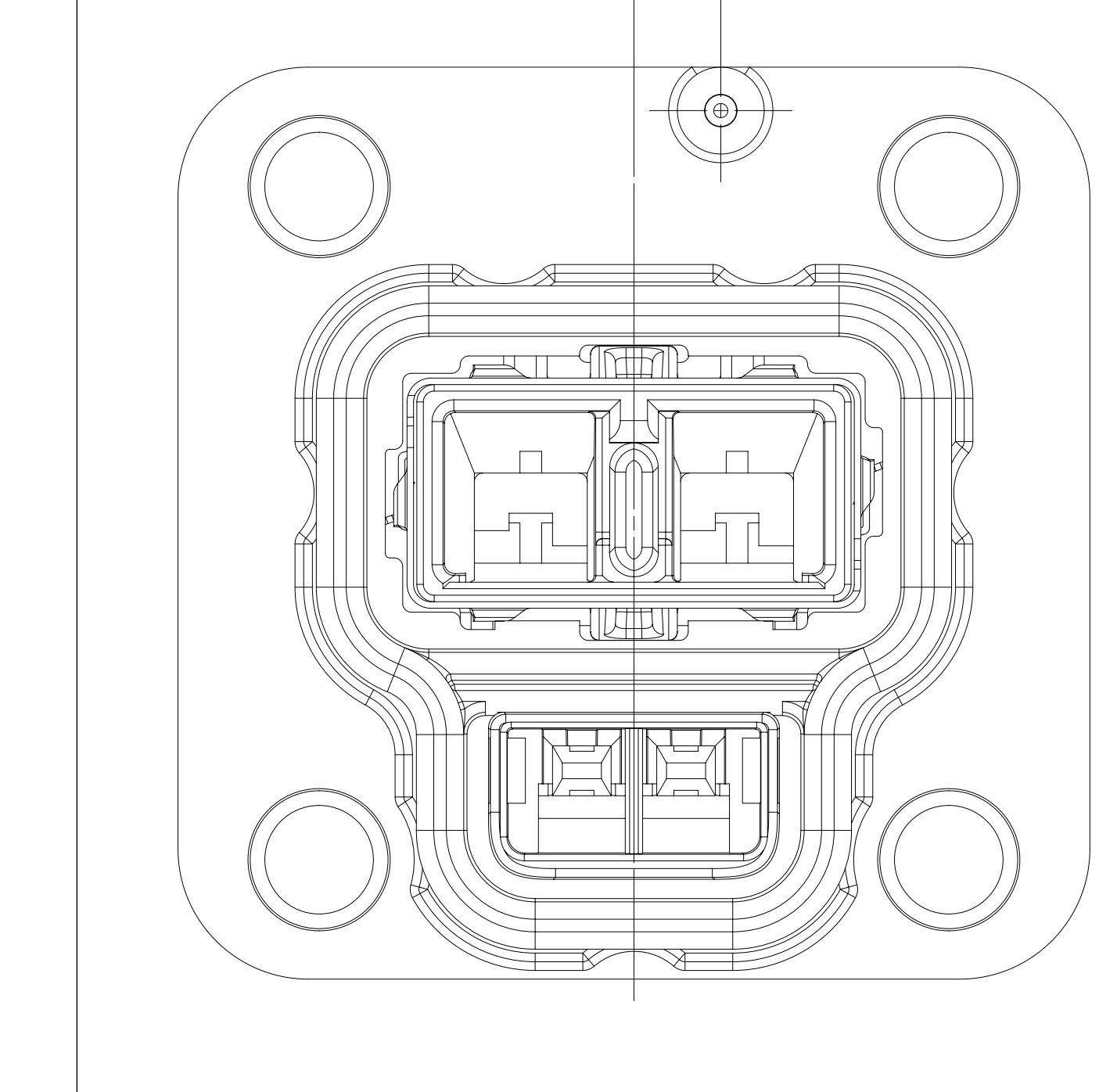

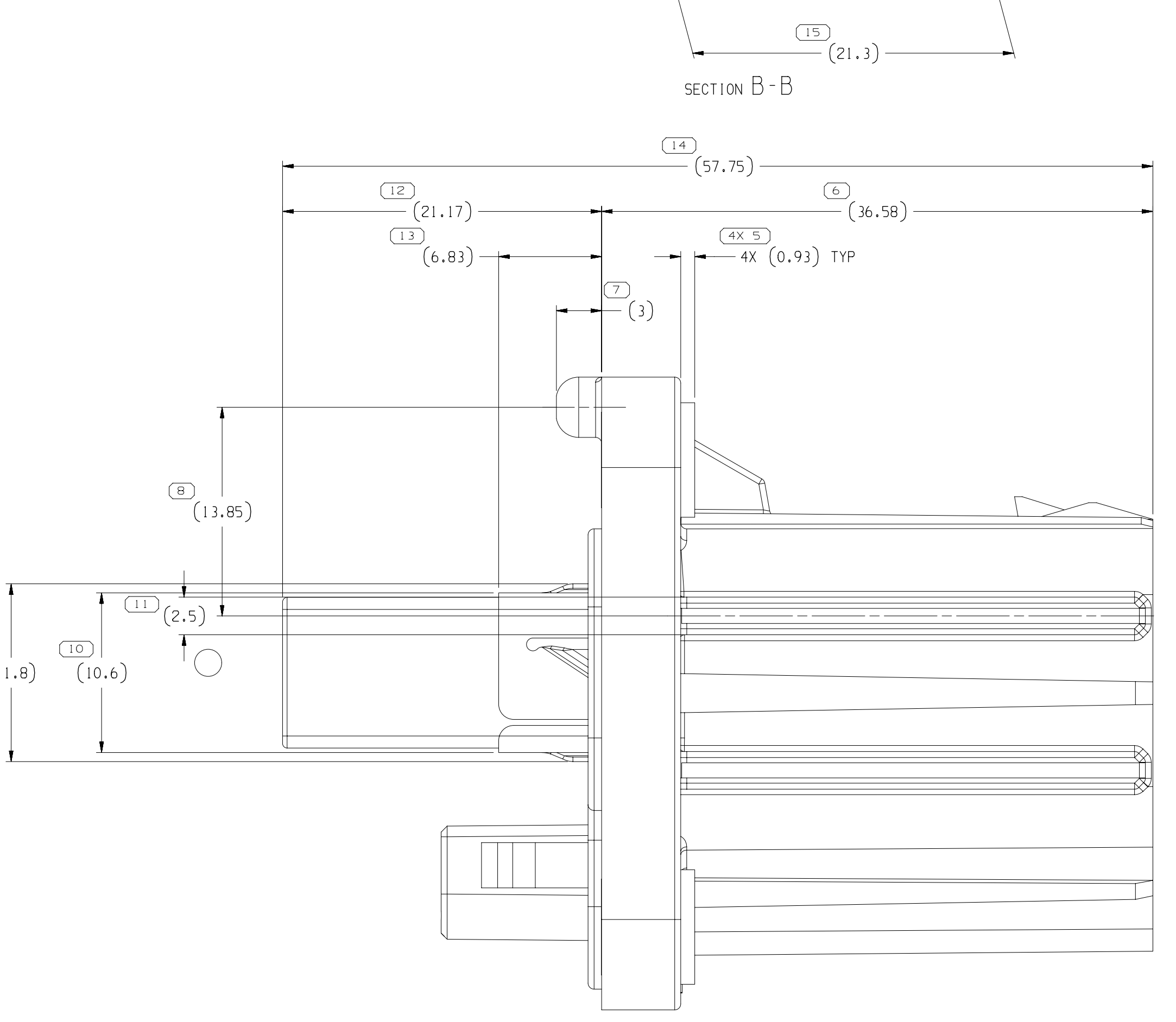
14
(57.75)
12
(21.17)
6
(36.58)
13
(6.83)
4X 5
4X (0.93) TYP
7
(3)
8
(13.85)
11
(2.5)
2X 9
2X (11.8)
10
(10.6)

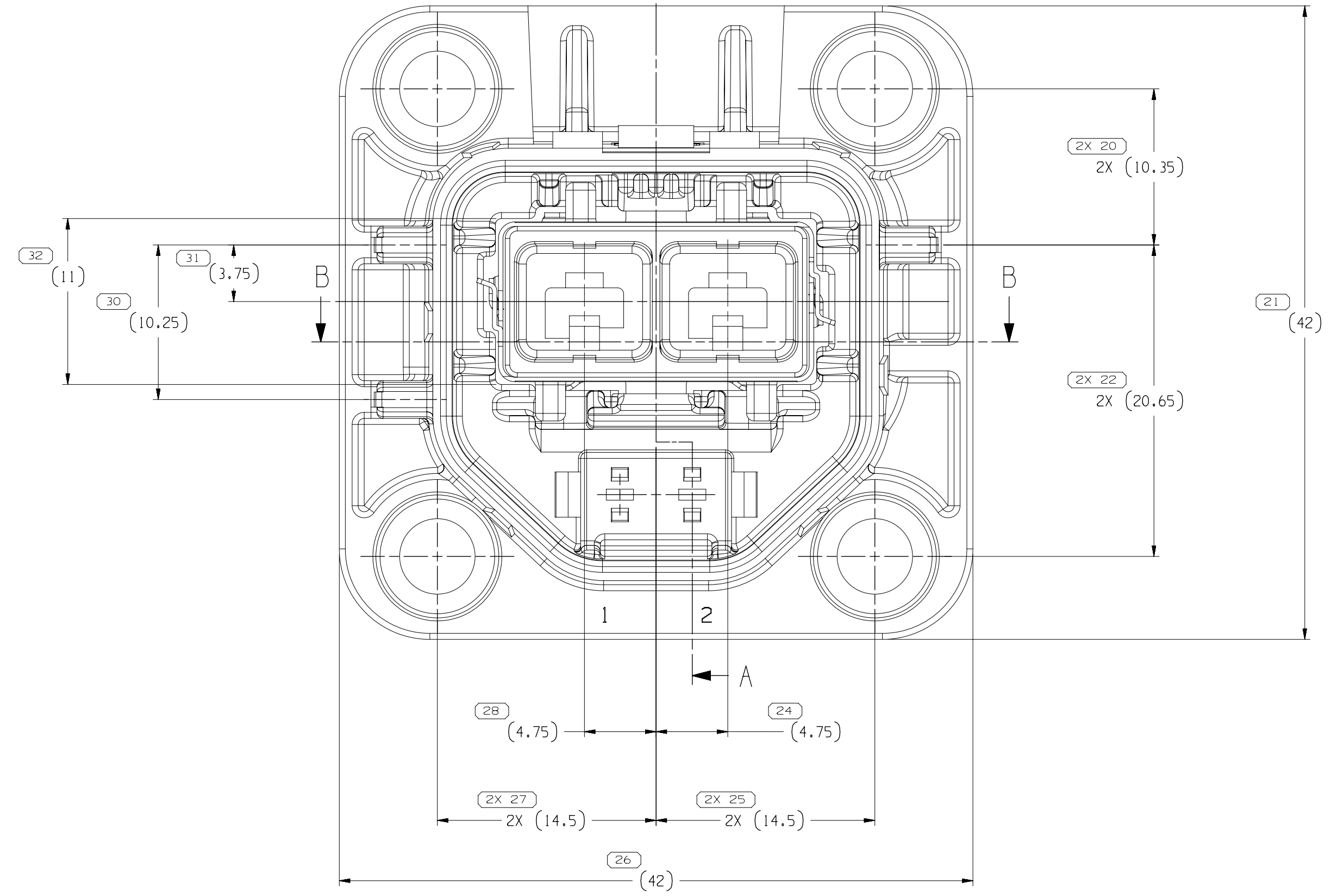
A
B
B
32
(11)
31
(3.75)
30
(10.25)
2X 20
2X (10.35)
2X 22
2X (20.65)
21
(42)
1
2
A
28
(4.75)
24
(4.75)
2X 27
2X (14.5)
2X 25
2X (14.5)
26
(42)
TYPE 101

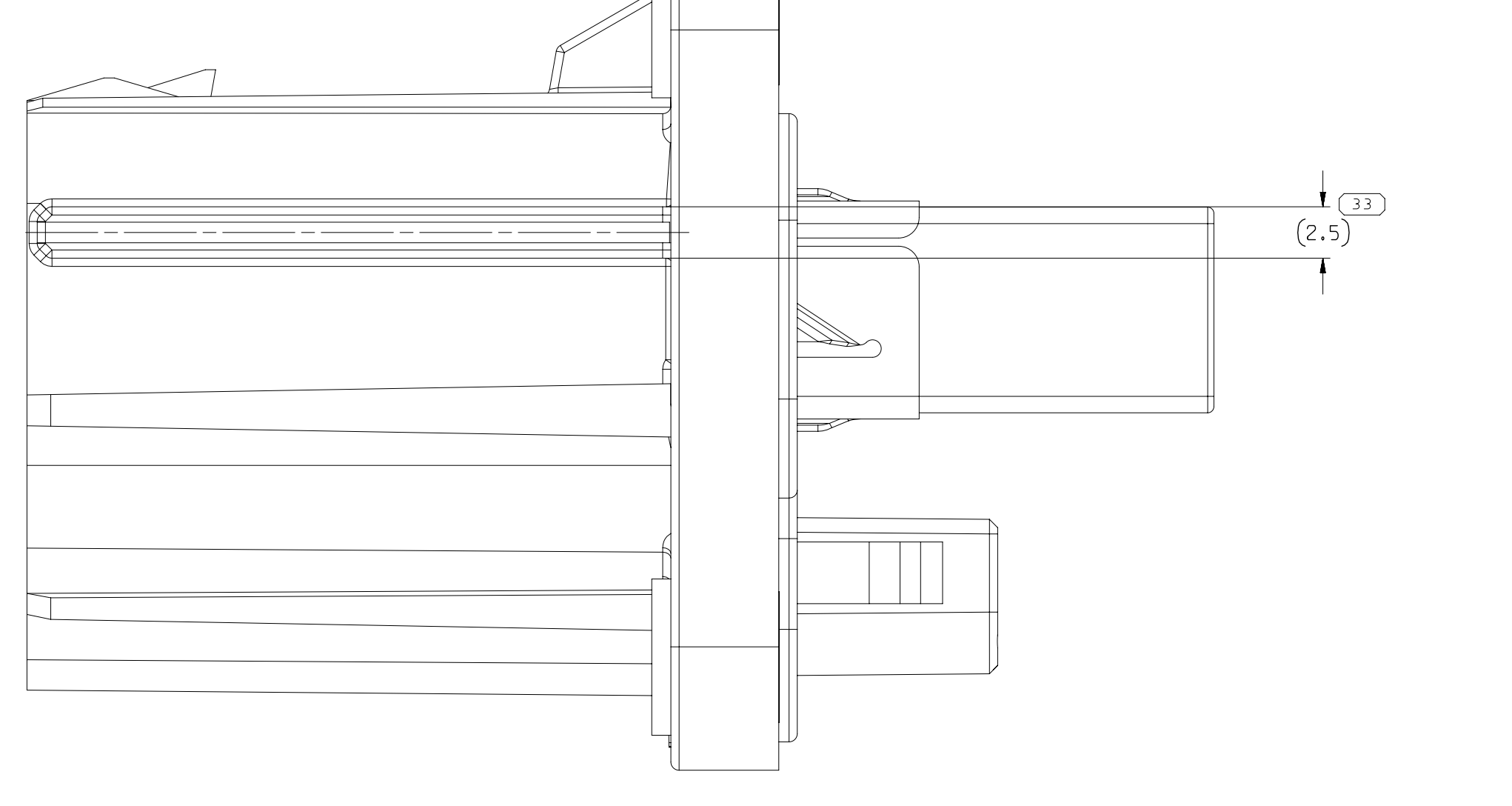

NOTES

1. UNLESS OTHERWISE SPECIFIED AND/OR INDICATED:

   DIMENSIONS ARE TO FACE OF VIEW SHOWN AND AUTOMATICALLY ROUNDED BY COMPUTER FOR INSPECTION (SEE MATH MODEL FOR PRECISE DIMENSIONS). FOR ALL OTHER DIMENSIONS NOT SHOWN BUT REQUIRED FOR TOOL BUILD, SEE MATH MODEL FOR PRECISE TOOL PATH DATA.
2. FOR MATING CONFIGURATION REQUIREMENTS, SEE PART NUMBER 35449351.
3. FOR APPLICATION DATA SEE THE INDIVIDUAL APPLICATION DRAWINGS.
4. THIS PRODUCT IS NOT CATEGORIZED AS AN APPEARANCE ITEM, MINOR IMPERFECTIONS INCLUDING, BUT NOT LIMITED TO, FLOW MARKS, COLOR BLEMISHES, GATE VESTIGE, AND SOFT FLASH THAT DO NOT AFFECT THE FIT, FORM, OR FUNCTION OF THE PART ARE PERMISSIBLE PER EANP_4-3_CS_01_EN.
5. RECOMMENDED FASTENER TIGHTENING TORQUE IS 2.5N. OVER TORQUE TESTING AND TORQUE TO FAILURE MUST BE PERFORMED BY DEVICE CASE OR TIER ONE SUPPLIER.
6. THIS ASSEMBLY MUST BE LEAK TESTED PER ES-A-755.
7. SEAL MAY BECOME DISLODGED DURING SHIPPING AND HANDLING. BEFORE ATTACHING TO THE MATING DEVICE OR COVER, THE OPERATOR MUST MAKE SURE THE SEAL IS INTACT AND PROPERLY ASSEMBLED AS SHOWN.
8. HARNESS MANUFACTURER IS RESPONSIBLE FOR VALIDATING THE CONNECTION AS APPLIED ON CABLE TO THE REQUIREMENTS OF SPECIFIC APPLICATION.
9. ELECTRIC VEHICLE CHARGING AND OTHER HIGH DUTY CYCLE APPLICATIONS CARRYING ≥ 25A REQUIRE THE FOLLOWING
   - MIN 5.0 MM² COPPER CONDUCTORS.
   - TERMINAL TO CONDUCTOR INTERFACE RESISTANCES ≤ 0.2 MILLIOHMS. SOLDERED CRIMPS ARE RECOMMENDED.
   - TERMINAL TEMPERATURES NEED TO BE MEASURED IN THE VEHICLE APPLICATION TO INSURE T-RISE OVER AMBIENT IS ≤ 35° C AT MAXIMUM CONTINUOUS CURRENT.
10. PARTS MUST BE PACKAGED IN COMPARTMENTAL CONTAINERS OR TRAYS AND BE PACKED IN PLASTIC BAGS OR THE SHIPPING CONTAINER MUST BE LINED WITH PLASTIC LINERS. BAG OR LINERS MUST BE SEALED TO AVOID FORIEGN MATTER.
11. REFERENCE MANUAL 35449352 FOR ASSEMBLY/DISASSEMBLY INFORMATION.
12. ALL LISTED ASSEMBLIES VALIDATED TO SAE/USCAR-2 R6: 2013-02;
    SAE/USCAR-37: 2008-08 AUG 2008 (T1, V1, S3);WITH THE FOLLOWING EXCEPTIONS:
    MALE 480 TERMINAL FROM CONNECTOR EXTRACTION FORCE WITH PRIMARY LOCK ONLY IS > 90N.
    MALE 480 TERMINAL FROM CONNECTOR EXTRACTION FORCE WITH PRIMARY & SECONDARY LOCK IS > 130N.
13. CONNECTOR DESIGNS PROVIDE THE FOLLOWING MINIMUM CREEPAGE DISTANCES WHEN MATED, AS ASSESSED PER IEC60664 WITH POLLUTION DEGREE 2 OR 3:
    - CAVITIES A TO SHIELD OR B TO SHIELD = 7.5 MM
    - CAVITIES A TO B = 13.5 MM

PART NO	REV	N/P	TYPE	HEADER SHROUD	INNER CONNECTOR	SHIELD CAN (2PLCS)	FACE SEAL	PRESS FIT INSERT - (4 PLCS)
~~35560545~~	01	AD	104	35560544	35327273	13824828	35448330	33211751
35447187	01	AF	103	35447117	35327273	13824828	35448330	33211751
35447182	01	AE	102	35447116	35327273	13824828	35448330	33211751
35447175	01	AF	101	35447115	35327273	13824828	35448330	33211751

38 PROCESS SENSITIVE DIMENSION

DIMENSIONS ENCLOSED IN ( ) INDICATE REFERENCE DIMENSIONS AND NO TOLERANCE LIMITS ARE ESTABLISHED

DIMENSIONAL RANGE (MM)									CHART E1
FROM TO	> 0 20	> 20 30	> 30 70	> 70 100	>100 150	>150 200	>200 250	>250 300	>300 400
TOLERANCE UNLESS OTHERWISE SPECIFIED									
	±0.15	±0.2	±0.3	±0.4	±0.5	±0.6	±0.8	±1	±1.2
ANGULAR TOLERANCE ±2°									

A ——— LINE DRAWN THROUGH A PART NUMBER INDICATES THAT PHYSICAL PARTS ARE NOT AVAILABLE FOR ORDERING.

PART NUMBERS THAT DO NOT HAVE A LINE PRESENT INDICATE THAT PHYSICAL PARTS ARE AVAILABLE FOR ORDERING.

CONTACT APTIV SALES TO ASSURE AVAILABILITY OF PARTS.

DWG TYPE
PART DRAWING

STYLE

VOLUME (CM³)

DISTR CODE D

UNLESS OTHERWISE SPECIFIED

THIS DOCUMENT IS IN ACCORDANCE WITH ASME Y14.5-2009. SEE APTIV ENGINEERING DESIGN STANDARD B6 2017 FOR ISO 1101:2004 RECONCILIATION REQUIREMENTS.

ALL DIMENSIONS ARE IN MILLIMETERS

REFERENCE

THIRD ANGLE PROJECTION

DO NOT SCALE

USE MATH DATA

CAD NX

•APTIV•

CONNECTION SYSTEMS
WARREN, OH

COPYRIGHT 2020 APTIV. ALL RIGHTS RESERVED.

THIS DRAWING IS THE PROPERTY OF APTIV AND CONTAINS APTIV CONFIDENTIAL INFORMATION. THE REPRODUCTION, DISTRIBUTION AND UTILIZATION OF THIS DOCUMENT OR ITS RELATED CAD MATH DATA, AS WELL AS COMMUNICATION OF ANY CONTENT TO OTHERS, WITHOUT EXPRESS AUTHORIZATION, IS PROHIBITED.

		DATE
DR		
APVD1	T. ILER	19FE20
APVD2	T. ILER	19FE20
APVD3	MIGUEL NINO	19FE20
APVD4		
APVD5		

SUBSTANCES OF CONCERN AND RECYCLED CONTENT PER APTIV 10949001

MATERIAL
SEE DRAWINGS

DRAWING NAME
TAXI CONN 2 M H/VOLTAGE
MIXED MODULAR

DRAWING NUMBER
35447212

SIZE	SCALE	FRAME NO	SHEET NO	STG	REV	N/P
A1x5	5:1	1 OF 3	1 OF 1	R	07	-

User: nzd447
Part: 35447212-CUS01-S01/07 Date: 03-Jan-23 Time: 10:29:10
nzd447,01032023,10:27,316pass,nor