DARGESTELLT IST F028900
*REPRESENTED IS*

BEMERKUNGEN / *NOTES*

(1) DURCHGESTRICHENE VERSIONEN BZW. WEITERE LEITERQUERSCHNITTE AUF ANFRAGE
*PART NUMBER MARKED BY A CROSS IN THE TABLE RESP. ADDITIONAL WIRE SIZES WILL BE AVAILABLE ON REQUEST*

(2) DIE DICHTFLAECHEN MUESSEN FREI VON EINFALLSTELLEN, RISSEN, LUNKERN, FURCHEN UND TRENNMARKIERUNGEN SEIN. DER ZULAESSIGE GRAT FUER ALLE AUSFUEHRUNGEN DARF MAX. 0.1 DICK x 0.3 HOCH SEIN.
*SEALING AREA SURFACE MUST BE FREE OF CUTS, BUBBLES, BLOWHOLES, FURROWS AND INSERT MARKS. PERMISSIBLE BURRS FOR ALL TYPES MAX. 0.1 THICK x 0.3 HIGH*

(n) LAUFENDE NUMMERN IM PRUEFBERICHT
*SEQUENTIAL NUMBERS IN THE DIMENSIONAL REPORT*

u Moeglicherweise nicht zutreffend je nach Lieferant/ May not be applicable according to manufacturer

| DWG STATUS DATE | STG | REV | N/P | CHG | ZONE | REVISION HISTORY | AUTH | DR | APVD 1 | APVD 2 |
|---|---|---|---|---|---|---|---|---|---|---|
| 21DE16 | R | 01 | | | | FILE TRANSLATED FROM MVL SYSTEM<br>REDRAWN IN NX | | V.DUR | C.CLA | C.CLA |
| 07N019 | R | 02 | | | | NEW SWS REFERENCE ADDED<br>REPLACED MVL PART NUMBER BY APTIV PART NUMBER | | J.LEV | J.FAB | J.FAB |
| 22JA20 | R | 02 | AA | | | NOTE u ADDED<br>CORRECTED DIMENSION 7AND ADDITION<br>OF ±0.2mm TOLERANCE | | J.LEV | J.FAB | J.FAB |

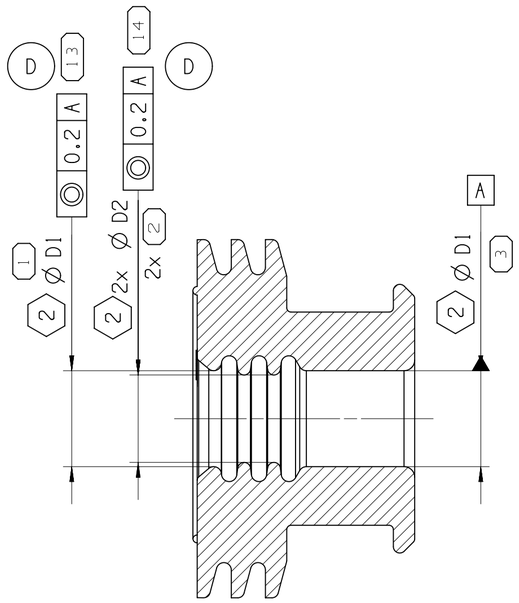


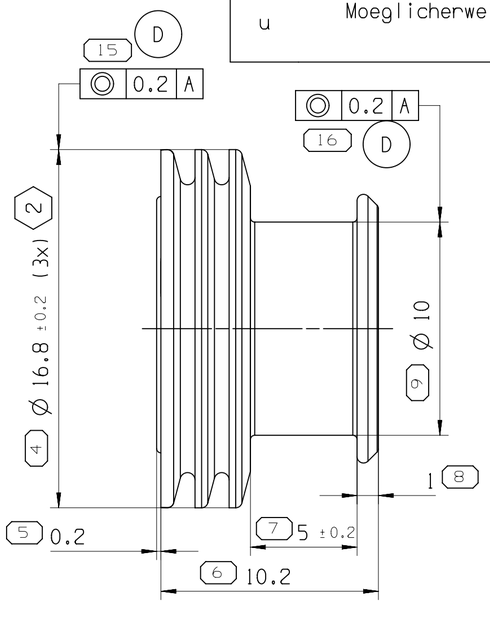


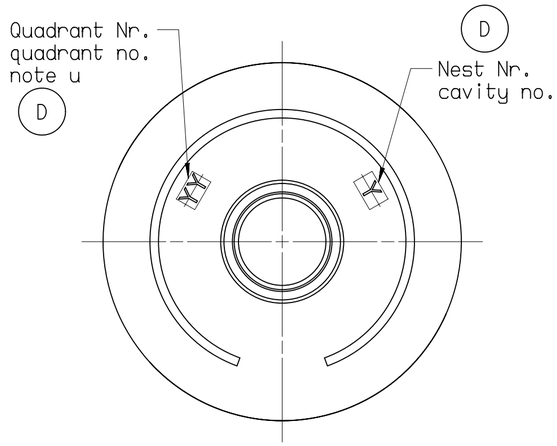


DARGESTELLT IST F428900
*REPRESENTED IS*

FEHLENDE MASSE SIEHE
*MISSING DIMENSIONS SEE*
F028900

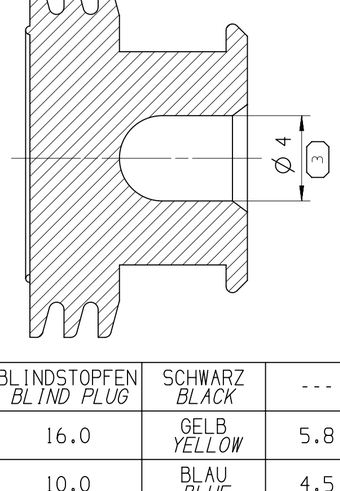

1:1

| | | | | | | | | |
|---|---|---|---|---|---|---|---|---|
| ~~33525344~~ | BLINDSTOPFEN *BLIND PLUG* | SCHWARZ *BLACK* | --- | --- | --- | 1.38 | 15±0.1 | SILIKONKAUTSCHUK 50±5° SHORE A OELANTEIL 2±1% *SILICON RUBBER 50±5° SHORE A OIL CONTENT 2±1%* |
| 33503295 | 16.0 | GELB *YELLOW* | 5.8 | 5.3 | 6.3 - 6.9 | 1.16 | | |
| 33503294 | 10.0 | BLAU *BLUE* | 4.5 | 4.1 | 5.0 - 5.6 | 1.28 | | |
| 35239048 | 6.0 | GRUN *GREEN* | 3.2 | 2.8 | 4.00 - 4.30 | 1.3 | | |
| TEILE-NR. *PART-NO* | LEITER-QUERSCHNITT *WIRE SIZE* (mm²) | FARBE *COLOR* | Ø D1 ±0.1 (mm) | Ø D2 ±0.1 (mm) | ISOLATION-Ø *INSULATION-Ø* (mm) | GEWICHT *WEIGHT* (g) | VERWENDBARER KAMMER-Ø *USABLE CAVITY-Ø* (mm) | MATERIAL |

A ——— LINE DRAWN THROUGH A PART NUMBER INDICATES THAT PHYSICAL PARTS ARE NOT AVAILABLE FOR ORDERING.

PART NUMBERS THAT DO NOT HAVE A LINE PRESENT INDICATE THAT PHYSICAL PARTS ARE AVAILABLE FOR ORDERING.

CONTACT APTIV SALES TO ASSURE AVAILABILITY OF PARTS.

MIT EINER ——— LINIE DURCHGESTRICHENE PART-NR GEKENNZEICHNET, DASS DIESE PART-NR NICHT BESTELLT WERDEN KANN

PART-NR DIE KEINE LINIE ZEIGEN, KENNZEICHNEN, DAS TEILE ZUR BESTELLUNG VERFUEGBAR SIND

FUER VERFUEGBARKEIT DER PARTS DEN EINKAUF VON APTIV KONTAKTIEREN

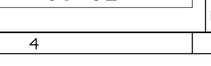


SHARP CORNER TOLERANCE

| MISSING SYMBOLS |
|---|
| 10-12 |

( ) DIM TO CHECK PRUEFMASSE
( ) DIM FOR HELP HILFSMASSE
( ) THEORETIC DIM THEORE. MASSE

DWG TYP
PART DRAWING

WEIGHT (GR)
VOLUME (CM³)
ROUTING
DISTR CODE
D

UNLESS OTHERWISE SPECIFIED

GENERAL TOLERANCES ACCORDING TO:
DIN ISO 3302-1
DIN ISO 8015

GD&T ACCORDING TO:

REFERENCE
PCC0688220

FIRST ANGLE PROJECTION

DO NOT SCALE
USE MATH DATA
CAD
NX

**•APTIV•**

CONNECTION SYSTEMS
Epernon, France


COPYRIGHT APTIV. ALL RIGHTS RESERVED.

THIS DRAWING IS THE PROPERTY OF APTIV AND CONTAINS APTIV CONFIDENTIAL INFORMATION. THE REPRODUCTION, DISTRIBUTION AND UTILIZATION OF THIS DOCUMENT OR ITS RELATED CAD MATH DATA, AS WELL AS COMMUNICATION OF ANY CONTENT TO OTHERS, WITHOUT EXPRESS AUTHORIZATION, IS PROHIBITED.

CE PLAN EST LE PROPRIETE DE APTIV ET CONTIENT DES INFORMATIONS APTIV CONFIDENTIELLES. LA REPRODUCTION, LA DISTRIBUTION ET L'UTILISATION DE CE DOCUMENT OU DE SES DONNÉES MATHÉMATIQUES CAO, AINSI QUE LA COMMUNICATION DE TOUT CONTENU À AUTRUI, SANS AUTORISATION EXPRESSE EST INTERDITE.


| | | DATE |
|---|---|---|
| DR | Peter NUETZEL | 17JA11 |
| APVD1 | Sylvia WEISS | 11JA12 |
| APVD2 | Ste MUELLER | 11JA12 |
| APVD3 | Franz PACHER | 13JA12 |
| APVD4 | | |
| APVD5 | | |

SUBSTANCES OF CONCERN AND RECYCLED CONTENT PER APTIV 10949001
MATIERES PROSCRITES ET CONTENU RECYCLABLE SELON APTIV 10949001

MATERIAL
SEE TABLE
SIEHE TABELLE

DRAWING NAME
SWS for terminal APEX950

DRAWING NUMBER
33524443

| SIZE | SCALE | FRAME NO | SHEET NO | STG | REV | N/P |
|---|---|---|---|---|---|---|
| A2 | 5:1 | 1 OF 1 | OF 1 | R | 02 | AA |

User: hzigl
Part: 33524443-CUS01-S01/02AA
hzigl_01272020_13:38_rail_cus
Date: 27-janv.-20 Time: 13:38:54