SYMBOL DEFINITION		
A DIMENSION WITHOUT AN INSPECTION REPORT SYMBOL ( ) DOES NOT REQUIRE INSPECTION. IT MAY BE CONTROLLED ON THE INDIVIDUAL COMPONENT DRAWING.	TOTAL NO OF INSPECTIONS REQUIRED	14
	LAST NO. USED	8

MISSING SYMBOLS
NO MISSING SYMBOL NUMBER

DWG STATUS					ZONE	REVISION HISTORY	AUTH	DR	APVD 1	APVD 2
DATE	STG	REV	N/P	CHG						
05AP17	R	01	-	-		CREATED PART DRAWING	436256	JSK	SNS	MTA
13AP18	R	02	-	-		REVISED GRAPHICS	439538	SM	RRR	MTA
20AU18	R	02	AA	-		ADDED LABEL SEALING SURFACE QUALITY	440701	AHY	AHY	TM
25AP19	R	03	-	-		REVISED GRAPHICS AND ADDED INSPECTION SYMBOL DIM #8	443053	MH	MSD	MTA
19NO19	R	03	AA	-		UPDATED PART AVAILABILITY	550567	JAA	JAA	DDJ

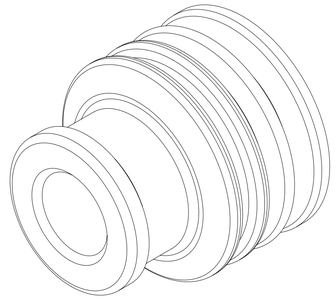

SCALE 8:1

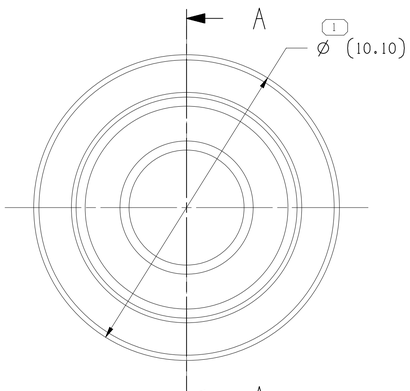

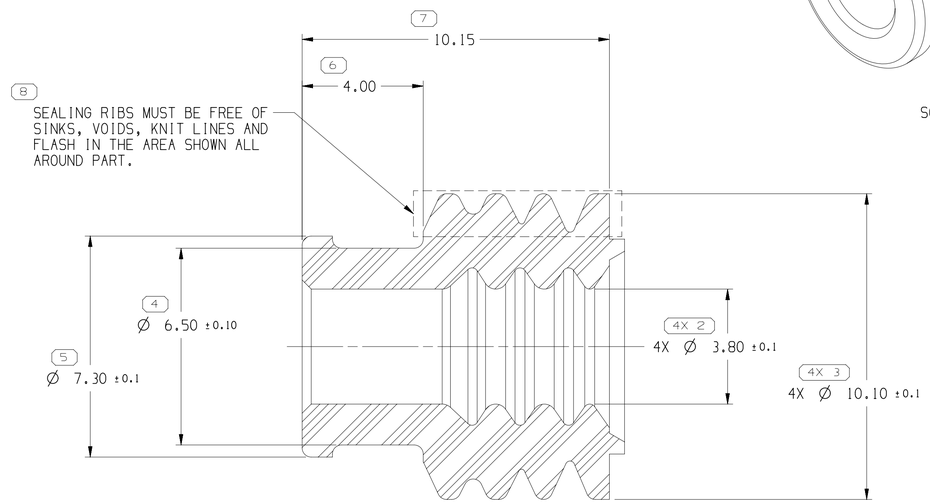

SECTION A - A

NOTES

1. UNLESS OTHERWISE SPECIFIED AND/OR INDICATED:

   DIMENSIONS ARE TO FACE OF VIEW SHOWN AND AUTOMATICALLY ROUNDED BY COMPUTER FOR INSPECTION (SEE MATH MODEL FOR PRECISE DIMENSIONS). FOR ALL OTHER DIMENSIONS NOT SHOWN BUT REQUIRED FOR TOOL BUILD, SEE MATH MODEL FOR PRECISE TOOL PATH DATA.

2. PARTS MUST BE MADE FROM VIRGIN MATERIAL ONLY.

3. THIS PRODUCT IS NOT CATEGORIZED AS AN APPEARANCE ITEM, MINOR IMPERFECTIONS INCLUDING, BUT NOT LIMITED TO, FLOW MARKS, COLOR BLEMISHES, GATE VESTIGE, AND SOFT FLASH THAT DO NOT AFFECT THE FIT, FORM, OR FUNCTION OF THE PART ARE PERMISSIBLE PER DPNP-4.7-CS-01.

4. THIS CABLE SEAL IS ONLY FOR CABLES WITH AN OD 4.6 mm - 5 mm.

3 PROCESS SENSITIVE DIMENSION

DIMENSIONS ENCLOSED IN ( ) INDICATE REFERENCE DIMENSIONS AND NO TOLERANCE LIMITS ARE ESTABLISHED

DIMENSIONAL RANGE (MM)				CHART E
FROM 0	> 20	> 30	> 70	> 100
TO 20	30	70	100	
TOLERANCE UNLESS OTHERWISE SPECIFIED				
±0.15	±0.2	±0.3	±0.4	±0.5
ANGULAR TOLERANCE ±2°				

A ——— LINE DRAWN THROUGH A PART NUMBER INDICATES THAT PHYSICAL PARTS ARE NOT AVAILABLE FOR ORDERING.

PART NUMBERS THAT DO NOT HAVE A LINE PRESENT INDICATE THAT PHYSICAL PARTS ARE AVAILABLE FOR ORDERING.

CONTACT APTIV SALES TO ASSURE AVAILABILITY OF PARTS.

DWG TYPE: PART DRAWING

STYLE

VOLUME (CM³): 0.429

DISTR CODE: D

UNLESS OTHERWISE SPECIFIED

THIS DOCUMENT IS IN ACCORDANCE WITH ASME Y14.5M-1994 AS AMENDED BY THE GM GLOBAL DIMENSIONING AND TOLERANCING ADDENDUM-2001. SEPARATE PATTERNS OF FEATURES MAY BE GAGED SEPARATELY REGARDLESS OF DATUM REFERENCES.

ALL DIMENSIONS ARE IN MILLIMETERS

REFERENCE

THIRD ANGLE PROJECTION

DO NOT SCALE

USE MATH DATA

NX

•APTIV•

CONNECTION SYSTEMS

Chennai, India

COPYRIGHT 2017 APTIV. ALL RIGHTS RESERVED.

THIS DRAWING IS THE PROPERTY OF APTIV AND CONTAINS APTIV CONFIDENTIAL INFORMATION. THE REPRODUCTION, DISTRIBUTION AND UTILIZATION OF THIS DOCUMENT OR ITS RELATED CAD MATH DATA, AS WELL AS COMMUNICATION OF ANY CONTENT TO OTHERS, WITHOUT EXPRESS AUTHORIZATION, IS PROHIBITED.

		DATE
DR		
APVD1	SIVAKUMAR J	05AP17
APVD2	SUDHAKAR N S	05AP17
APVD3	MCKINNEY, TERESA	05AP17
APVD4		
APVD5		

SUBSTANCES OF CONCERN AND RECYCLED CONTENT PER APTIV 1094900I

MATERIAL: SILICONE METHYL/VINYL VIOLET

DRAWING NAME: SEAL CBL 1W 6.3

DRAWING NUMBER: 33387255

SIZE	SCALE	FRAME NO	SHEET NO	STG	REV	N/P
A1	10:1	1 OF 1	1 OF 1	R	03	AA

User: w30275 Date: 19-Nov-19 Time: 08:25:57
Proj: 33387255-CUS01-S01/03AA
w2027c.111920190808:22:98pass.pnr.wz0276