SYMBOL DEFINITION			MISSING SYMBOLS
A DIMENSION WITHOUT AN INSPECTION REPORT SYMBOL ( ) DOES NOT REQUIRE INSPECTION. IT MAY BE CONTROLLED ON THE INDIVIDUAL COMPONENT DRAWING.	TOTAL NO OF INSPECTIONS REQUIRED	27	NO MISSING SYMBOL NUMBER
	LAST NO. USED	13	

DWG STATUS						ZONE	REVISION HISTORY	AUTH	DR	APVD I.T.E.	APVD
DATE	STR	REV	N/P	CHG							
29APD4	R	01	-	-	-		WAS PE11B139 AND RELEASED	254257	EES	EES	KRG
29JL04	R	02	-	-			REVISED PART TO DRAWINGS & MODEL OF PE11B139 REV-05	257164	JS	JS	KRG
07DEC04	R	02	AA				2X 6 +0.78/-0.15 WAS 2X 6± ADDED "DUE TO BOW" CALLOUTS (3 PLCS)	261390	AJK	AJK	KRG

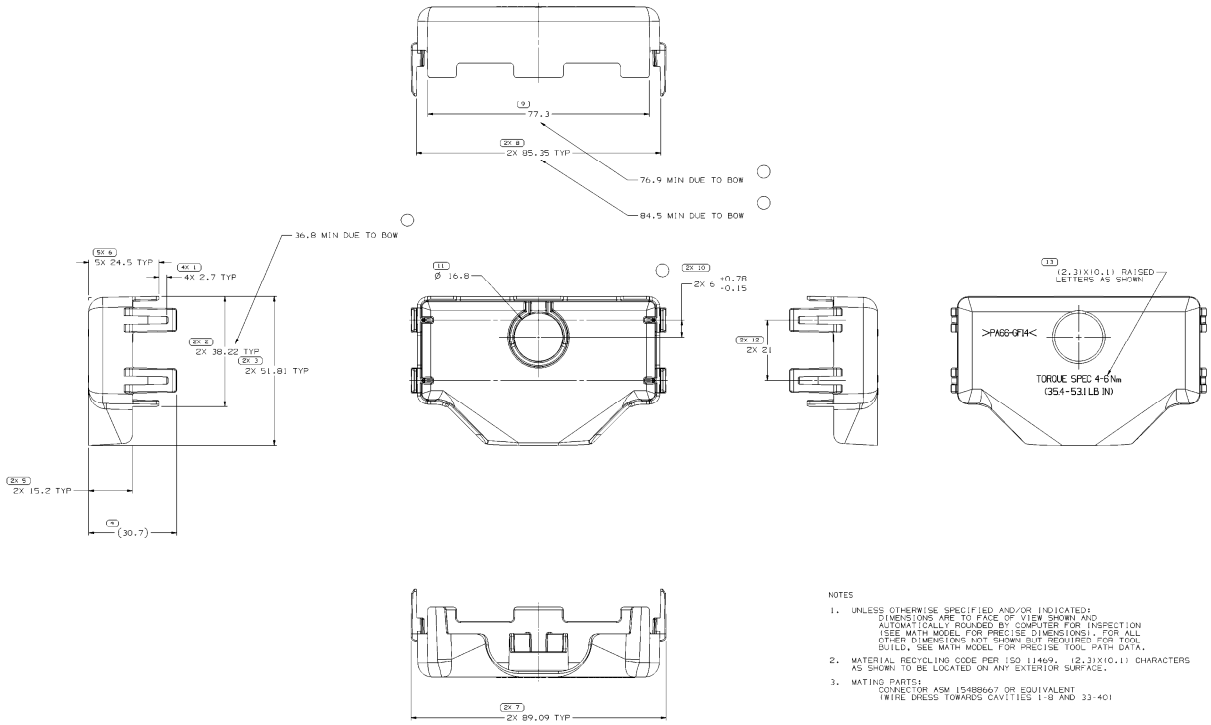

NOTES

1. UNLESS OTHERWISE SPECIFIED AND/OR INDICATED:
   DIMENSIONS ARE TO FACE OF VIEW SHOWN AND AUTOMATICALLY ROUNDED BY COMPUTER FOR INSPECTION (SEE MATH MODEL FOR PRECISE DIMENSIONS). FOR ALL OTHER DIMENSIONS NOT SHOWN BUT REQUIRED FOR TOOL BUILD, SEE MATH MODEL FOR PRECISE TOOL PATH DATA.
2. MATERIAL RECYCLING CODE PER ISO 11469. (2.3)X(0.1) CHARACTERS AS SHOWN TO BE LOCATED ON ANY EXTERIOR SURFACE.
3. MATING PARTS:
   CONNECTOR ASM 15488667 OR EQUIVALENT
   (WIRE DRESS TOWARDS CAVITIES 1-8 AND 33-40)

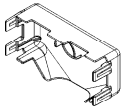

DWG TYPE	PART DRAWING
STYLE	
VOLUME (CUFT) 13.767	STATE CODE

UNLESS OTHERWISE SPECIFIED
THIS DOCUMENT IS AN ASSOCIATE WITH ANSI Y14.5M-1994 DIMENSIONING & TOLERANCING. DIMENSIONS ARE TO BE FOLLOWED IN PREFERENCE TO ANY SCALED DIMENSIONS. SURFACE FINISHES OF FEATURES ARE NOT SHOWN. GEOMETRY, DIMENSIONS OR FEATURES ARE NOT SHOWN ON DRAWING, REFER TO MATH MODEL REFERENCE.

ALL DIMENSIONS ARE IN MILLIMETERS

(7) PROCESS SENSITIVE DIMENSION

REFERENCE

CONFIDENTIAL DRAWING. THIS IS NOT TO BE REPRODUCED OR DISCLOSED TO THIRD PARTIES WITHOUT WRITTEN AUTHORIZATION

NUMERICAL RANGE (MM)											
FROM	0.5	3.15	6	30	70	100	200	300	500	1000	2000
TO	3.15	6	30	70	100	200	300	500	1000	2000	4000

GENERAL TOLERANCE (MM)							
±0.15	±0.2	±0.3	±0.5	±0.8	±1	±1.2	±2

ANGULAR TOLERANCE ±0.5°

THIRD ANGLE PROJECTION

DO NOT SCALE

USE MATH DATA

DELPHI

DELPHI PACKARD ELECTRIC SYSTEMS
WARREN, OH

	DATE
DR MPV01 E. SEIDEL	29APD4
MPV02 E. SEIDEL	29APD4
MPV03 KARL GRZENA	30APD4
MPV04	
MPV05	

SUBSTANCES OF CONCERN AND RECYCLED CONTENT PER DELPHI 12MPR001

MATERIAL
MC27P001 PA66 GF14 IM BLK

DRAWING NAME
COV WIRE DRESS BLK

DRAWING NUMBER
15488664

SIZE	SCALE	FRAME NO	SHEET NO	STR	REV	N/P
A0	2:1	1 OF 1	1 OF 1	R	02	AA