N°	DESCRIPTION		WIRE SECTION 35mm²	WIRE SECTION 50mm²	WIRE SECTION 70mm²	MATERIAL
	REAR SEALING ASSEMBLY	APTIV PN	35084610	35084586	35236755	
		APTIV REV N°	02	02	02	
1	RETAINER	APTIV PN	35082306	35101375	35234887	PA66 GF30
		COLOR	BLACK	BROWN	GREY	
		SIZE (D2)± 0.2	14.7	15.9	18.4	
2	SWS	APTIV PN	35082312	35082330	35234886	SILICON
		COLOR	BLUE	GREY	GREEN	
		SIZE (D1)± 0.2	12.8	14.4	16.6	

SECTION VIEW

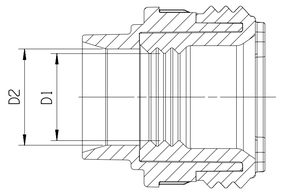

ASSOCIATED PARTS N°	DESIGNATION	CODING	APTIV PN
1	PLUG 890	CODE 1	35084575
		CODE 2	35084602
2	PLUG 890 SW	CODE 1	35254366

DWG STATUS DATE	STG	REV	N/P	CHG	ZONE	REVISION HISTORY	AUTH	DR	APVD 1	APVD 2
17AP19	R	01	-			INITIAL RELEASE		P.K.S	L.EVE	J.FAB
30JL21	R	02	-		G10	DESIGN CHANGE ON RETAINER 50mm² TO INCREASE RETENTION FORCE (ADDED RIBS BELOW THE CLIPS)		S.NAV	L.EVE	J.FAB
18MA22	R	03				Revision updated on 35mm² (35084610) due to reduction of the dimension D1 (13mm to 12.8mm)		J.DAC	J.FAB	
050123	R	03	AA			DIM 4 modified : was 35.6 : is 36.05 Modification due to ribs added on revision 02 of the current drawing+ Delphi PN change to APTIV PN in associated parts table		J.DAC	J.FAB	

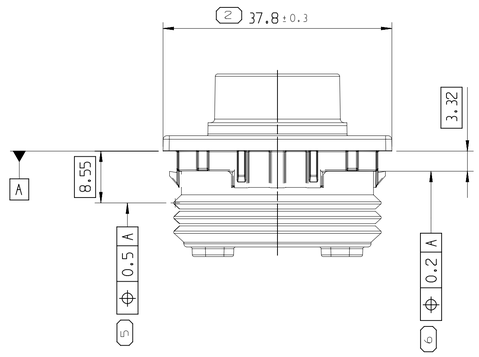

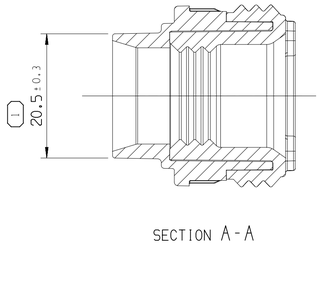

SECTION A-A

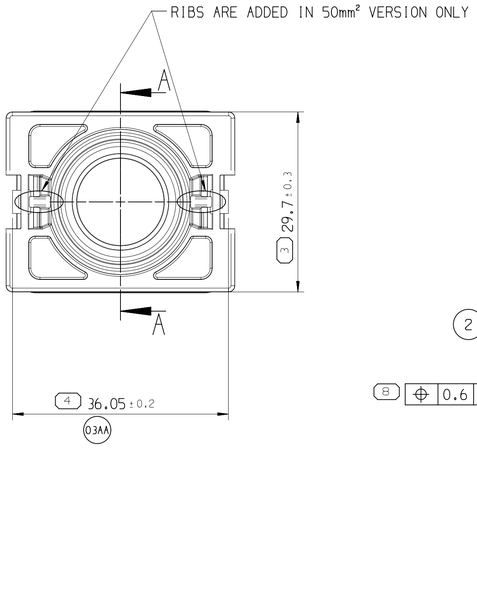

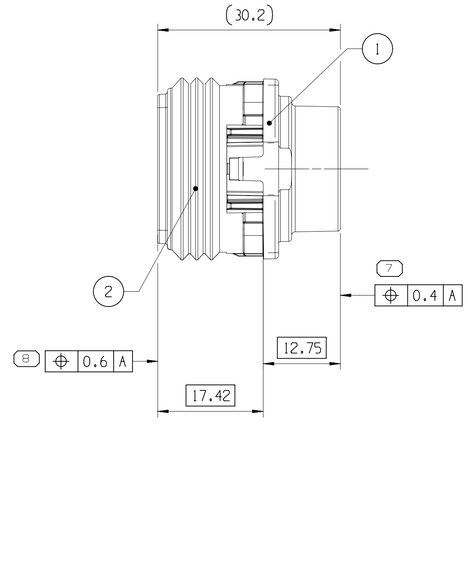

3D VIEW
SCALE 1:1

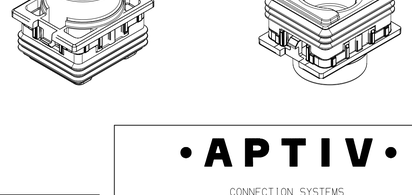

A ——— LINE DRAWN THROUGH A PART NUMBER INDICATES THAT PHYSICAL PARTS ARE NOT AVAILABLE FOR ORDERING.

PART NUMBERS THAT DO NOT HAVE A LINE PRESENT INDICATE THAT PHYSICAL PARTS ARE AVAILABLE FOR ORDERING.

CONTACT APTIV SALES TO ASSURE AVAILABILITY OF PARTS.

LA LIGNE ——— TRACÉE SUR LA RÉFÉRENCE PIÈCE INDIQUE QUE LA PIÈCE N'EST PAS DISPONIBLE À LA COMMANDE

LES RÉFÉRENCES PIÈCES QUI NE SONT PAS BARRÉES INDIQUENT QUE CELLES-CI SONT DISPONIBLES PHYSIQUEMENT POUR ÊTRE COMMANDÉES

CONTACTER LE SERVICE COMMERCIAL DE APTIV POUR SASSURER DE LA DISPONIBILITÉ DES PIÈCES

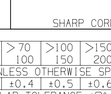

SHARP CORNER TOLERANCE

DIM TO CHECK / COTES A VERIFIER	DIMENSIONAL RANGE (MM) FROM	> 0 TO 20	> 20 30	> 30 70	> 70 100	>100 150	>150 200	>200 250	>250 300	>300 400
( ) DIM FOR HELP / COTES POUR INFO	TOLERANCE UNLESS OTHERWISE SPECIFIED									
THEORETIC DIM / COTES THEORIQUES		±0.15	±0.2	±0.3	±0.4	±0.5	±0.6	±0.8	±1	±1.2
	ANGULAR TOLERANCE ±2°									

DWG TYP
PART DRAWING

WEIGHT (GR)	DISTR CODE
-	D
VOLUME (CM³) -	
ROUTING	

UNLESS OTHERWISE SPECIFIED

GENERAL TOLERANCES ACCORDING TO: SEE TABLE

GD&T ACCORDING TO: ISO 1101

REFERENCE

FIRST ANGLE PROJECTION

DO NOT SCALE

USE MATH DATA

CAD NX

•APTIV•

CONNECTION SYSTEMS
Chennai, India

COPYRIGHT 2019 APTIV. ALL RIGHTS RESERVED.

THIS DRAWING IS THE PROPERTY OF APTIV AND CONTAINS APTIV CONFIDENTIAL INFORMATION. THE REPRODUCTION, DISTRIBUTION AND UTILIZATION OF THIS DOCUMENT OR ITS RELATED CAD MATH DATA, AS WELL AS COMMUNICATION OF ANY CONTENT TO OTHERS, WITHOUT EXPRESS AUTHORIZATION, IS PROHIBITED.

CE PLAN EST LE PROPRIETE DE APTIV ET CONTIENT DES INFORMATIONS APTIV CONFIDENTIELLES. LA REPRODUCTION, LA DISTRIBUTION ET L'UTILISATION DE CE DOCUMENT OU DE SES DONNÉES MATHÉMATIQUES CAO, AINSI QUE LA COMMUNICATION DE TOUT CONTENU À AUTRUI, SANS AUTORISATION EXPRESSE EST INTERDITE

		DATE
DR	PRAVEEN KUMAR.S	17AP19
APVD1	E.LAM	17AP19
APVD2	M.VENARD	17AP19
APVD3	J.FABRE	17AP19
APVD4		
APVD5		

SUBSTANCES OF CONCERN AND RECYCLED CONTENT PER APTIV 10949001
MATIERES PROSCRITES ET CONTENU RECYCLABLE SELON APTIV 10949001

MATERIAL
SEE TABLE

DRAWING NAME
REAR SEALING ASSEMBLY
35084611-CUS02

DRAWING NUMBER
35084611

SIZE	SCALE	FRAME NO	SHEET NO	STG	REV	N/P
A1	2:1	1 OF 1	1 OF 1	R	03	AA

User: 328cxk
Form: 35084611-CUS02-SO1/03AA Date: 05-Jan-23 Time: 20:04:50
328cxk.01052022.1.15.12.129pass.cus