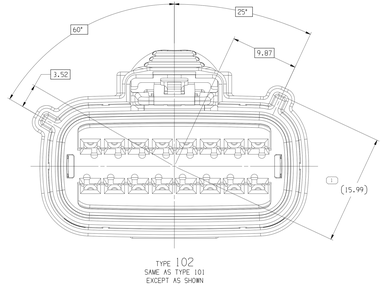

TYPE 102
SAME AS TYPE 101
EXCEPT AS SHOWN

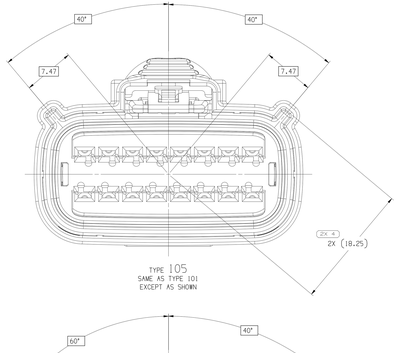

TYPE 105
SAME AS TYPE 101
EXCEPT AS SHOWN

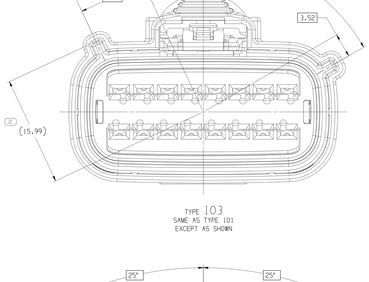

TYPE 103
SAME AS TYPE 101
EXCEPT AS SHOWN

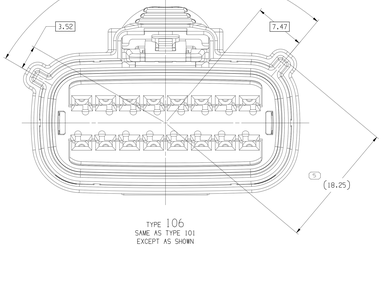

TYPE 106
SAME AS TYPE 101
EXCEPT AS SHOWN

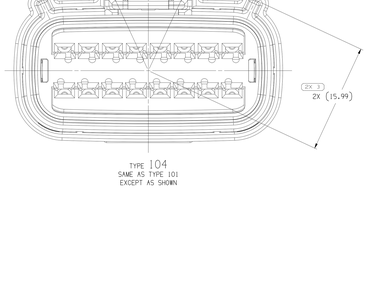

TYPE 104
SAME AS TYPE 101
EXCEPT AS SHOWN

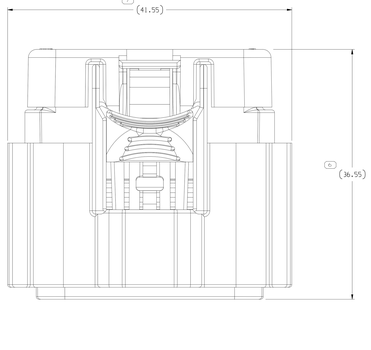

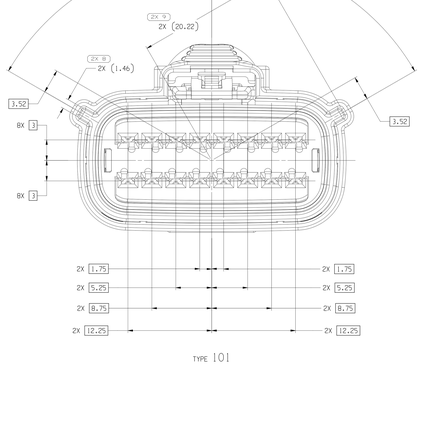

TYPE 101

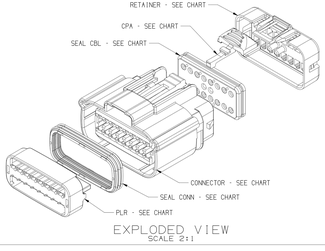

EXPLODED VIEW
SCALE 2:1

SYMBOL DEFINITION		MISSING SYMBOLS
A DIMENSION WITHOUT AN INSPECTION REPORT SYMBOL DOES NOT REQUIRE INSPECTION. IT MAY BE CONTROLLED ON THE INDIVIDUAL COMPONENT DRAWING.	TOTAL NO OF INSPECTIONS REQUIRED 16	NO MISSING SYMBOL NUMBER
	LAST NO. USED 12	

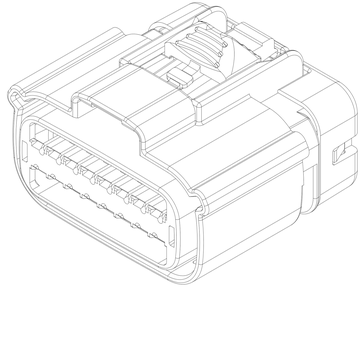

DWG STATUS					ZONE	REVISION HISTORY	AUTH	DR	APVD	APVD
DATE	STS	REV	N/P	CHG						
10JA13	R	01	-	-	-	15514473 -WAS PE244648, REV'D & RELEASED 15514474 -WAS PE244649, REV'D & RELEASED 15514475 -WAS PE244650, REV'D & RELEASED 15514476 -WAS PE244651, REV'D & RELEASED 15514477 -WAS PE244652, REV'D & RELEASED 15514478 -WAS PE244653, REV'D & RELEASED	421071	HCD	HCD	DGI
09FE13	R	02	-	-	-	ALL PARTS - REVISED GRAPHICS	421295	HCD	HCD	DGI
02MY13	R	03	-	-	-	ALL PARTS - RELOCATED DIMS (7 PLCS) AND UPDATED CONN, RETAINER & PLR	421794	JLP	JVW	DAT
01NO13	R	04	-	-	-	ALL PART - REVISED GRAPHICS	424346	EVV	EVV	DGI
05DE13	R	05	-	-	-	ALL PARTS - ADDED "ACCEPTED CABLE O.D." NOTE	424870	AGC	JAA	DGI
18FE14	R	06	-	-	-	ALL PARTS - 1.75 ±0.3 WAS 1.75 AND REVISED RETAINER	425600	EVV	EVV	DGI
16AP14	R	07	-	-	-	33157811 - I4 - RELEASED	426171	EDH	EDH	EDH
08SE14	R	08	-	-	-	33157811-I4 - MOVED TO SHEET 02; ALL PARTS - UPDATED CPA & CONNECTOR	427366	KYT	KYT	RGC
24JN15	R	09	-	-	-	ALL PARTS - UPDATED PART AVAILABILITY	430007	DAG	DAG	JSM
24FE16	R	10	-	-	-	15514474-7B - UPDATED PART AVAILABILITY	432152	NRM	JVW	DGL
12AU16	R	11	-	-	-	ALL PARTS - UPDATED PLR TO LATEST REVISION, 16.971 WAS 6.97, REVISED LABEL 11 PLC1 AND PS0 WAS DIM #10	433263	NRM	DGL	DGL
25AP17	R	12	-	-	-	ALL PARTS - ADDED ASSEMBLY NOTES, REMOVED "ACCEPTED CABLE O.D." NOTE AND UPDATED NON APPEARANCE ITEM NOTE	436383	DAG	DAG	DGL
12SE17	R	13	-	-	-	15514474 - UPDATED PART AVAILABILITY	437739	CMW	CMW	DGL
06FE18	R	14	-	-	-	ALL PARTS - UPDATED PDM ATTRIBUTES	438951	ACV	DGL	ACV
20JN19	R	15	-	-	-	ALL PARTS - ADDED "PUNCH PATTERN CONFIGURATIONS" & "ASSEMBLIES WITHOUT CPA" NOTES	443339	JLL	DSP	DSP

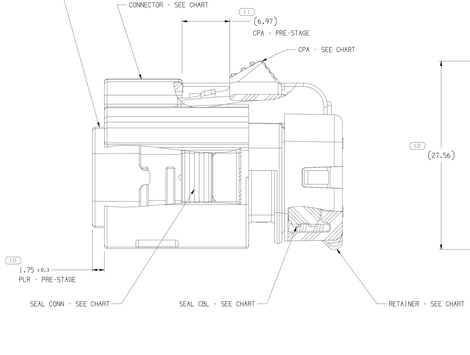

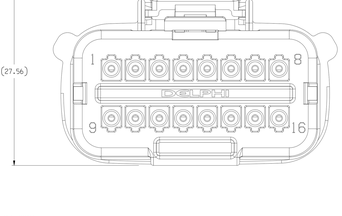

NOTES

1. UNLESS OTHERWISE SPECIFIED AND/OR INDICATED:

   DIMENSIONS ARE TO FACE OF VIEW SHOWN AND AUTOMATICALLY ROUNDED BY COMPUTER FOR INSPECTION (SEE MATH MODEL FOR PRECISE DIMENSIONS). FOR ALL OTHER DIMENSIONS NOT SHOWN BUT REQUIRED FOR TOOL BUILD, SEE MATH MODEL FOR PRECISE TOOL PATH DATA.

2. PART IS MANUFACTURED TO GEOMETRIC TOLERANCES. CENTERLINE DIMENSIONS ARE FOR REFERENCE ONLY.
3. SEALING CODE 4 - DESIGN WILL MEET REQUIREMENTS OF SAE/USCAR-2 CONNECTOR SYSTEM ENVIRONMENTAL TEST FLOWCHART (PRESSURE/VACUUM AND SUBMERSION).
4. THIS PRODUCT IS NOT CATEGORIZED AS AN APPEARANCE ITEM. MINOR IMPERFECTIONS (INCLUDING, BUT NOT LIMITED TO, FLOW MARKS, COLOR BLEMISHES, GATE VESTIGE, AND SOFT FLASH THAT DO NOT AFFECT THE FIT, FORM, OR FUNCTION OF THE PART ARE PERMISSIBLE PER EANP_4-3_CS_01_EN.
5. FOR APPLICATION DATA SEE THE INDIVIDUAL APPLICATION DRAWINGS.
6. ASSEMBLY TO BE USED WITH APPROPRIATE APTIV HOLDER DESIGN.
7. ASSEMBLY TO BE PROCESSED USING APTIV CONNECTION SYSTEMS BEST PRACTICE METHODS AND/OR CONNECTOR ASSEMBLY INSTRUCTIONS AND APPLICABLE REPAIR PROCEDURES.
8. BEFORE TERMINAL ASSEMBLY: VERIFY THAT PLR IS IN THE PRE-STAGE POSITION ON THE CONNECTOR. IF NOT, RETURN PLR TO PRE-STAGE POSITION.
9. FOR DIFFERENT PUNCH PATTERN CONFIGURATIONS (IF AVAILABLE) SEE SHEET 2
10. FOR ASSEMBLIES WITHOUT CPA SEE DRAWING 15532154

15514478	06	AF	106	15514469	15514487	1368706	15514486	15514483	15519096	F	NONE
15514477	06	AF	105	15514468	15514487	1368706	15514486	15514483	15519096	E	NONE
15514476	06	AF	104	15514466	15514487	1368706	15514486	15514483	15519096	D	NONE
15514475	06	AF	103	15514465	15514487	1368706	15514486	15514483	15519096	C	NONE
15514474	06	AG	102	15514463	15514487	1368706	15514486	15514483	15519096	B	NONE
15514473	06	AE	101	15514462	15514487	1368706	15514486	15514483	15519096	A	NONE
PART NO	REV	N/P	TYPE	CONNECTOR	PLR	SEAL CONN	SEAL CBL	RETAINER	CPA	USCAR	BLOCKED CAVITIES

DRAWING NUMBER							
15514480							
SIZE	SCALE	CHANGE NO	SHEET NO	SHEETS	REV	N/P	
A1x3	5:1	2 OF 2	1 OF 2	R	15	-	

(11) PROCESS SENSITIVE DIMENSION	REFERENCE
DIMENSIONS ENCLOSED IN ( ) INDICATE REFERENCE DIMENSIONS AND NO TOLERANCE IS REQUIRED FOR THESE DIMENSIONS.	

DIMENSIONAL RANGE (MM)										
FROM	0	>6	>30	>80	>120	>160	>200	>250	>315	>400
TO	>6	>30	>80	>120	>160	>200	>250	>315	>400	>500
TOLERANCE (UNLESS OTHERWISE SPECIFIED)										
±0.15	±0.20	±0.25	±0.30	±0.35	±0.40	±0.45	±0.50	±0.60	±0.70	±0.80
ANGULAR TOLERANCE ±2°										

THIRD ANGLE PROJECTION

DO NOT SCALE

USE MATH DATA

NX

ALL DIMENSIONS ARE IN MILLIMETERS

A "\" LINE DRAWN THROUGH A PART NUMBER INDICATES THAT PHYSICAL PARTS ARE NOT AVAILABLE FOR ORDERING.

PART NUMBERS THAT DO NOT HAVE A LINE PRESENT INDICATE PHYSICAL PARTS ARE AVAILABLE FOR ORDERING.

CONTACT APTIV SALES TO ASSURE AVAILABILITY OF PARTS.

DWG TYPE	PART DRAWING
STYLE	
VOLUME (CM³)	SYSTEM CODE

UNLESS OTHERWISE SPECIFIED

THIS DOCUMENT IS IN ACCORDANCE WITH ASME Y14.5M-1994 UNLESS OTHERWISE SPECIFIED. GEOMETRIC TOLERANCING MAXIMUM DEFECT. SEPARATE PATTERNS OF FEATURES MAY BE GAGED SEPARATELY REGARDLESS OF DATUM REFERENCES.

DR	
APVD1 HECTOR CLAUDIO	10JA13
APVD2 HECTOR CLAUDIO	11JA13
APVD3 GERARDO GOMEZ J.	18JA13
APVD4	
APVD5	
SUBSTANCES OF CONCERN AND RECYCLED CONTENT PER APTIV STANDARDS	
SEE CHART	
DRAWING NAME	TAXI ASM CONN 16 F OCS 1.5 SLD

APTIV
CONNECTION SYSTEMS
WARREN, OH
COPYRIGHT 2013 APTIV. ALL RIGHTS RESERVED.
THIS DRAWING IS THE PROPERTY OF APTIV AND CONTAINS APTIV CONFIDENTIAL INFORMATION. THE INFORMATION CONTAINED HEREIN OR UTILIZATION OF THIS DOCUMENT OR ITS RELATED CAD MATH DATA, MUST NOT BE COMMUNICATED OR ANY CONTENT TO CONTROL, WITHOUT EXPRESS AUTHORIZATION, IS PROHIBITED.

DRAWING NUMBER							
15514480							
SIZE	SCALE	CHANGE NO	SHEET NO	SHEETS	REV	N/P	
A1x3	5:1	1 OF 2	1 OF 2	R	15	-	

Tech Center
Date: 01-Jul-19 Time: 08:09:11
Name: 15514480_15_OCS_1.5_SLD_DRAW
Size: A1x3 Sheet: 1 of 2